A glimpse of the category and code for domestic and foreign commonly utilized limit switch's actuating head

Actuating head type / Code / Travel switch model	Plunger type 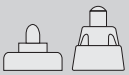	Plunger type with roller	Rotating arm type with roller 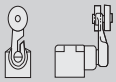	Rotating arm with adjustable roller 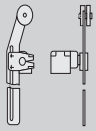	Free-divections type	Adjustable metal oscillating block type 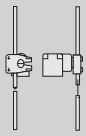	Fork type (double roller) 21、22、21S、22S 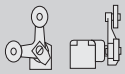
YBLX-ME8000	8111	8112、8122	8104	8108	8166、8169、8101	8107	
YBLX-WL	D、D1D、AD、SD、D1SD、ASD	AD2、01D2、WL-D2	CA2、01CA2、ACA2	CA12、ACA12、01CA12-2N	NJ、01NJ、ANJ	CL、ACL、HAL	CA32、01CA32、ACA32
YBLX-WLF5	D	D2、D28	H2	H12	NJ	HL	
YBLX-HL/5000	5100	5200	5000	5030	5300A、5500	5050	
YBLX-CK/S	S101	S102	S131、S139	S141		S159	
YBLX-CK/M	M110	M102、M121	M115		M106		
YBLX-CK/J	J161	J167	J10511	J10541		J10559	
YBLX-CK/P	P110	P102、P121、P128、P127	P118	P145	P106	P155	
YBLX-CK/T	T110	T102、T121	T118				
YBLX-P1	B、C	D、E、F	G、H、J、K	N、U	R	P、Q、V、W	
YBLX-K3	20S/Z、21S/Z	20S/L、21S/L	20S/B、21S/B	20S/T、21S/T	20S/W	20S/J	20S/H1、H2、H3
YBLX-K1	311、311M	411、411M	111、111M		511、511M		211、211M
YBLX-19	001		111、121、131				212、222、232
YBLX-2			111、121、131				212、222、232
YBLX-4			11、12、11S、12S		511		21、22、21S、22S
YBLX-K2	001、311	101、411	M111、131				211、222

Limit switch operating performances symbol and definitions

Operating force (OF)	Force made on actuating head to activate switch contact
Reset force (RF)	Force made on actuating head to make contact back to normal position
Travel force (TF)	Force made to make actuating head move from free position to the limit.
Free position (FP)	Actuating head's initial position without external force applied
Operating position (OP)	Actuating head's position when contact rapidly moves to action contacting position
Reset position (RP)	Actuating head's position when contact rapidly moves back to normal position from action contacting position
Total travel position (TTP)	Actuating head's position at threshold
Passage travel (PT)	Distance or angle passed by actuating head from free position to stop position
Over travel (OT)	Distance or angle passed by actuating head beyond the action position
Margin distance (MD)	Distance or angle from action position to reset position
Total travel (TT)	Total distance or total angle of actuating head's action travel

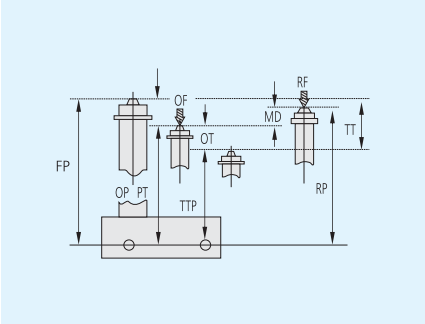

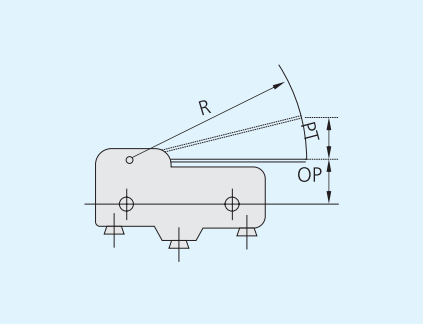

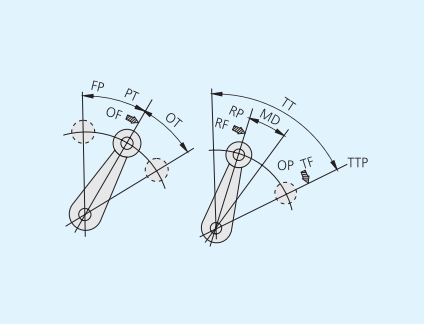

Ukrain	USA

YBLX-ME8000 Travel Switch

Contacting types

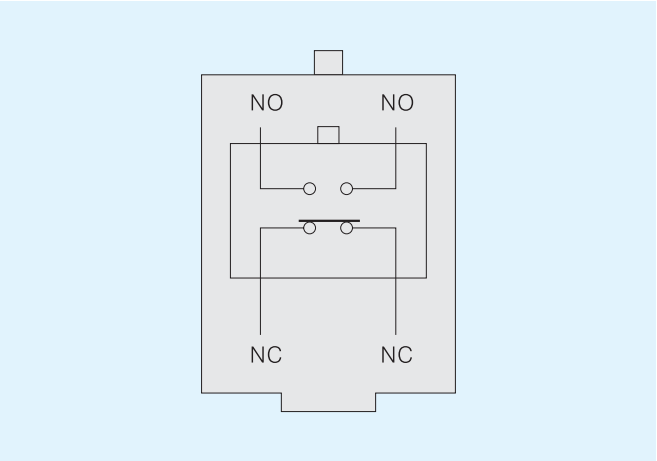

YB LX -ME / □

- Operating mode
- Design sequence number
- Travel switch
- Improved product

Protection level		IP52
Operating frequency (operations / minute)	Mechanical	120
	Electric	30
Mechanical life(operations)		60×10^4
Electrical life(operations)		30×10^4
Insulation resistance		≥5MΩ (DC500V)
Contact resistance		≤200mΩ (initial value)
Environmental temperature		-15℃～+60℃
Relative humidity		≤95%
Voltage withstand		Between terminals of the same polarity (1140V)
		Between electrified components and earth (2500V)
		Between terminals and un-electrified metal components (2500V)
Rated voltage(V)		AC 380V DC220V
Rated current		AC0.8A DC0.16A

Model (Recommended)	Operating mode	Substituted model (production stopped)	
YBLX-ME/8104	Rotating arm with roller	YBLX-AZ/8104	YBLX-TZ/8104
YBLX-ME/8107	Adjustable rotating lever	YBLX-AZ/8107	YBLX-TZ/8107
YBLX-ME/8108	Adjustable rolling pivoted arm	YBLX-AZ/8108	YBLX-TZ/8108
YBLX-ME/8111	Vertical compression plunger type	YBLX-AZ/8111	YBLX-TZ/8111
YBLX-ME/8112	Vertical compression plunger type with horizontal roller	YBLX-AZ/8112	YBLX-TZ/8112

Model (Recommended)	Operating mode	Substituted model (production stopped)		
YBLX-ME/8122	Vertical compression plunger type with roller which at right awgles to the fix board	YBLX-AZ/8122	YBLX-TZ/8122	
YBLX-ME/8166	Free-directions type I	YBLX-AZ/8166	YBLX-TZ/8166	
YBLX-ME/8169	Free-directions type II	YBLX-AZ/8169	YBLX-TZ/8169	
YBLX-ME/8101	Free-directions type III	YBLX-AZ/8101 YBLX-AZ/9101	YBLX-TZ/8101 YBLX-TZ/8101	YBLX-ME/9101

Model	Operating mode	OF(max)	RF(min)	PT(max)	OT(min)	MD(max)	TT
YBLX-ME/8104	Rotating arm with roller	12N	0.5N	35°	70°	10°	110°
YBLX-ME/8107	Adjustable rotating lever	12N	0.2-.5N	35°	70°	10°	110°
YBLX-ME/8108	Adjustable rotating arm with roller	12N	1.5N	35°	70°	10°	110°
YBLX-ME/8111	Vertical compression plunger type	12N	0.1-5N	5mm	2mm	0.7mm	7mm
YBLX-ME/8112	Vertical compression plunger type with horizontal roller	15N	1-5N	5mm	2mm	0.7mm	7mm
YBLX-ME/8122	Vertical compression plunger type with roller which at right awgles to the fix board	15N	1.5N	5mm	2mm	0.7mm	7mm
BLX-ME/8166	Free-directions type I	12N	-N	35°	-	-	-
YBLX-ME/8169	Free-directions type II	12N	-N	35°	-	-	-
YBLX-ME/8101	Free-directions type III	12N	-N	35°	-	-	-

YBLX-ME/8104

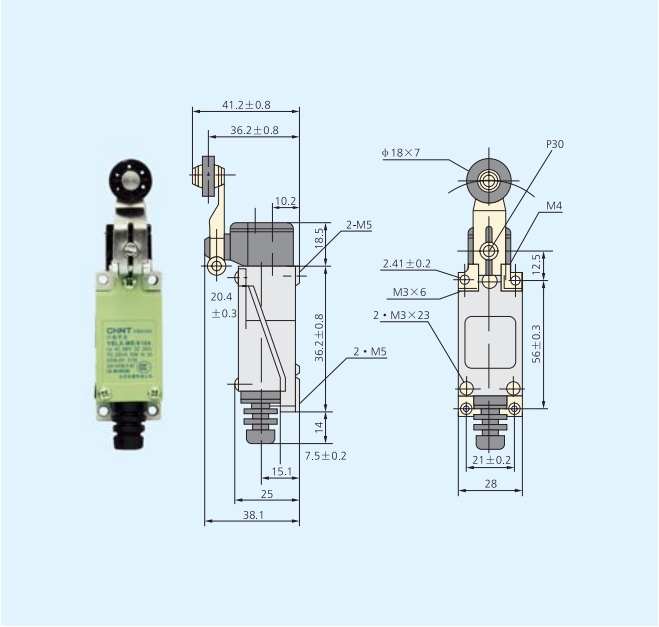

YBLX-ME/8108

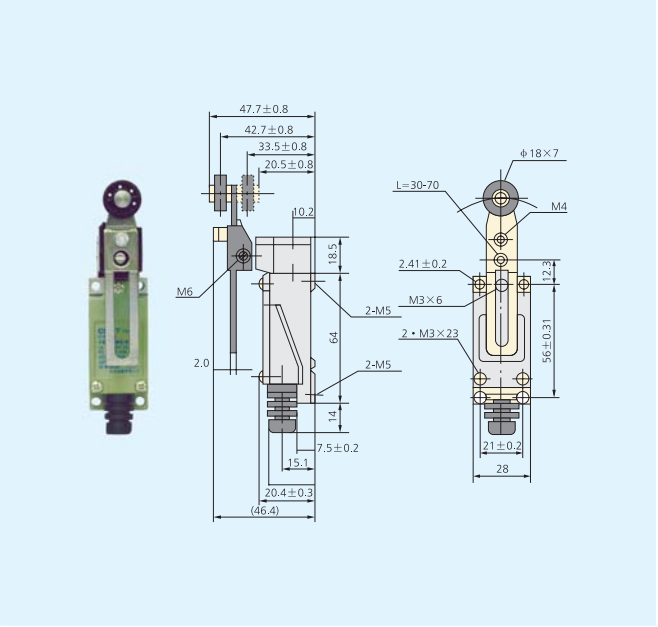

YBLX-ME/8107

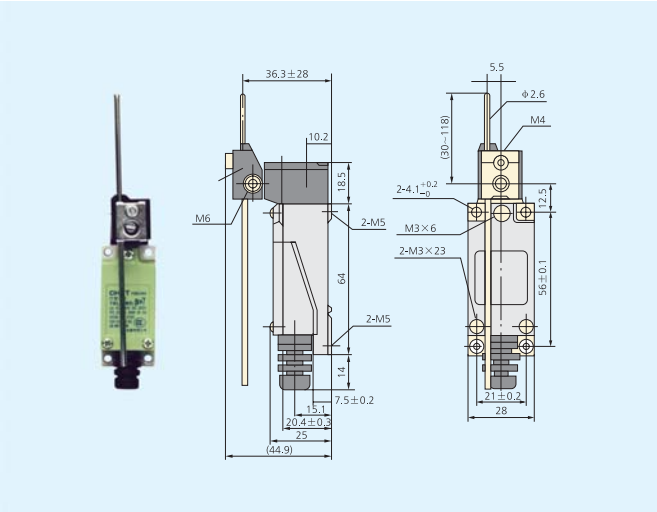

YBLX-ME/8111

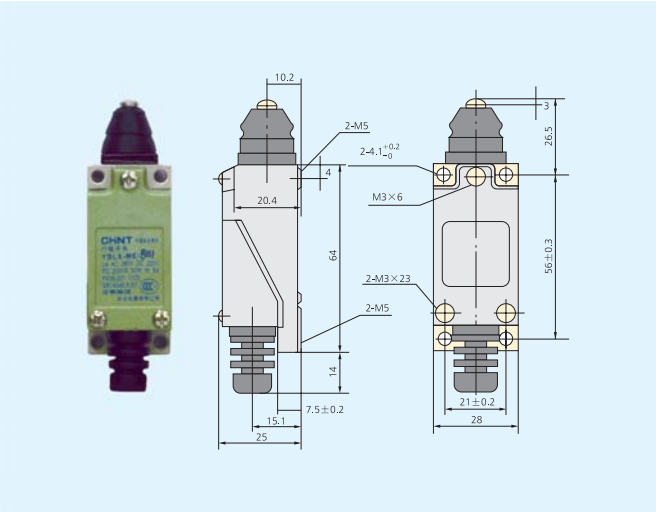

YBLX-ME/8112

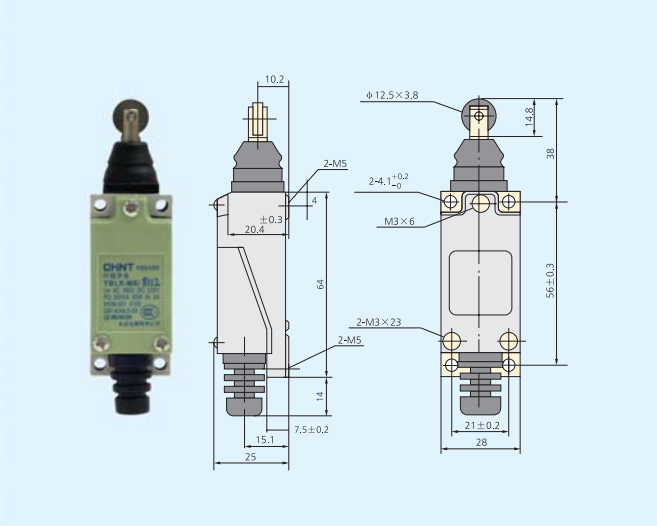

YBLX-ME/8122

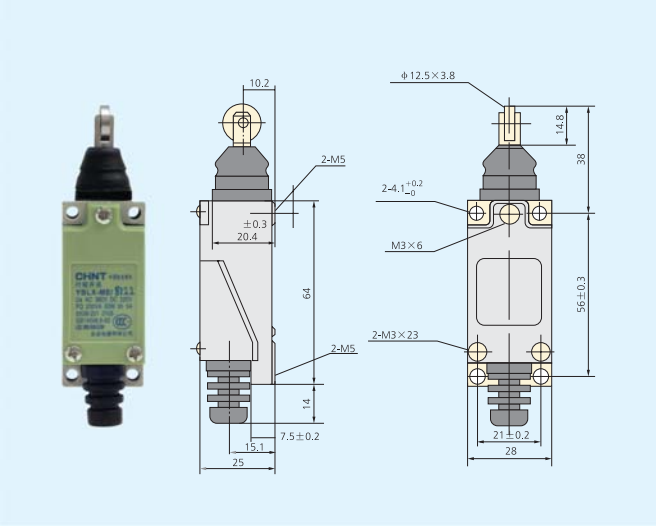

YBLX-ME/8166

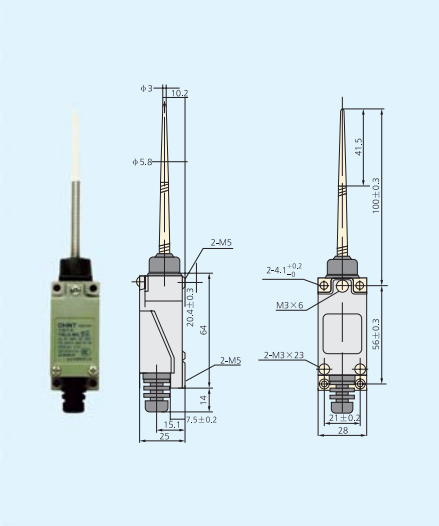

YBLX-ME/8101

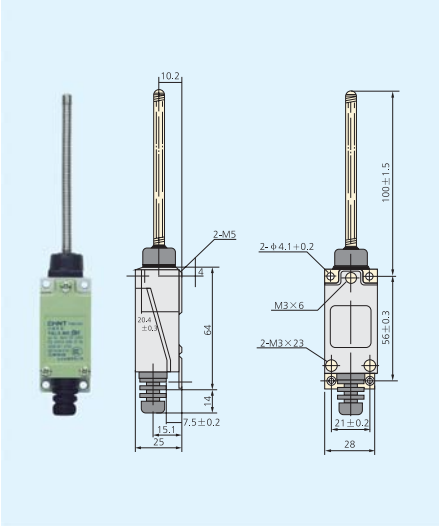

YBLX-ME/8169

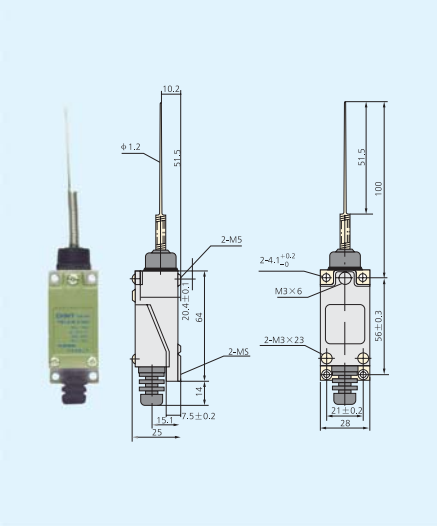

Ukrain	USA

YBLX-WL Travel Switch

Contacting types

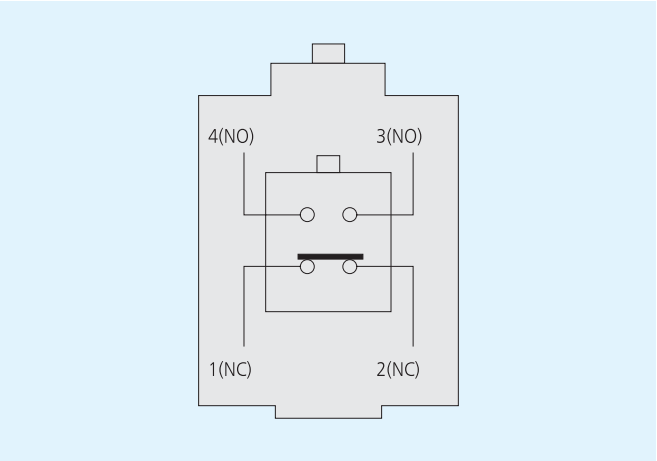

YB LX -WL / □

- Operating mode
- Design sequence number
- Travel switch
- Improved product

Protection level	IP52
Operating frequency (operations/minute)	Mechanical: 120
	Electric: 30
Operating speed	0.001～1m/s
Mechanical life (operations)	60×10^4
Electric life (operations)	30×10^4
Insulation resistance	≥5MΩ
Contact resistance	≤200MΩ
Environmental temperature	-10℃～+80℃
Relative humidity	≤95%
Voltage withstands	Between terminals of same polarity (1140V)
Rated voltage	Between electric components and earth (2500V)
	Between terminals and non-electric metalparts (2500V)
	AC 380V DC220V
Rated current	AC0.79A DC0.15A

Model (Recommended)	Operating mode	Substituted model (production stopped)		
YBLX-WL/CA2	Rotating arm with single roller	YBLX-WL/01CA2 YBLX-WK/CA2/2	YBLX-WL/ACA2 YBLX-WL/CA12/2	TZ-5104
YBLX-WL/CA12	Adjustable rotating arm with single roller	YBLX-WL/01CA12	YBLX-WL/ACA12	TZ-5108
YBLX-WL/D	Compression plunger type	YBLX-WL/01D	YBLX-WL/AD	TZ-5101
YBLX-WL/D2	Plunger type with roller	YBLX-WL/01D2	YBLX-WL/AD2	TZ-5102
YBLX-WL/D3	Compression plunger type with round cap	YBLX-WL/01D3	YBLX-WL/AD3	TZ-5109

Model (Recommended)	Operating mode	Substituted model (production stopped)		
YBLX-WL/NJ	Free-directions type I	YBLX-WL/01NJ	YBLX-WL/ANJ	TZ-5106
YBLX-WL/NJ/2	Free-directions type II	YBLX-WL/01NJ/2	YBLX-WL/ANJ/2	
YBLX-WL/NJ/S2	Free-directions type III	YBLX-WL/01NJ/S2	YBLX-WL/ANJ/S2	TZ-5169
YBLX-WL/CL	Adjustable straight lever type	YBLX-WL/01CL	YBLX-WL/ACL	TZ-5107
YBLX-WL/HAL4	Adjustable curved lever type	YBLX-WL/01HAL4	YBLX-WL/AHAL4	
YBLX-WL/HAL5	Adjustable spring type (free-directions type IV)	YBLX-WL/01HAL5	YBLX-WL/AHAL5	
YBLX-WL/CA32/41	Rotating arm with two rollers	YBLX-WL/01CA32/41 YBLX-WL/01CA32/43	YBLX-WL/ACA32/41 YBLX-WL/CA32/43 YBLX-WL/ACA32/43	TZ-5105 TZ-5125 TZ-5135

Model / Operating performance	Arm with roller			
	YBLX-WL/CA2	YBLX-WL/CA2/7	YBLX-WL/CA2/2N	YBLX-WL/CA2/8
OF(max)	20			
RF(min)	2.27N			
PT(max)	45°			
OT(min)	15°			
MD(max)	12°			

Model / Operating performance	Arm with roller			
	YBLX-WL/CA2/31	YBLX-WL/GCA2	YBLX-WL/CA12	YBLX-WL/CA12/2N
OF(max)			20N	
RF(min)			2.27N	
PT(max)			45°	
OT(min)			15°	
MD(max)			12°	

Model / Operating performance	Flexible spring densely wound coil(free directions type)			
	YBLX-WL/NJ	YBLX-WL/NJ30	YBLX-WL/NJ/2	YBLX-WL/NJ/S2
OF(max)	16N		16N	16N
RF(min)				0.28N
PT(max)	45°		45°	45°
OT(min)				
MD(max)				

Model / Operating performance	Adjustable level			
	YBLX-WL/CL	YBLX-WL/CL/2N	YBLX-WL/HAL4	YBLX-WL/HAL5
OF(max)	20N	20N	20N	20N
RF(min)	0.28N	0.28N	0.28N	0.28N
PT(max)	45°	45°	45°	45°
OT(min)	15°	15°	15°	15°
MD(max)	12°	10°	10°	10°

Model / Operating performance	Arm with two rollers	Plunger	Plunger with single roller	Plunger with round cap
	YBLX-WL/CA32/41/43	YBLX-WL/D	YBLX-WL/D2	YBLX-WL/D3
OF(max)	25N	30	30N	30N
RF(min)	-	9.1N	9.1N	9.1N
PT(max)	60°	7.5mm	7.5mm	7.5mm
OT(min)	10°	2mm	2mm	2mm
MD(max)	-	1mm	1mm	1mm
OP(max)	-	34±0.8mm	44±0.8mm	44.5±0.8mm
TTP(max)	-	29.5°	39.5°	39.5°

YBLX-WL/CA2

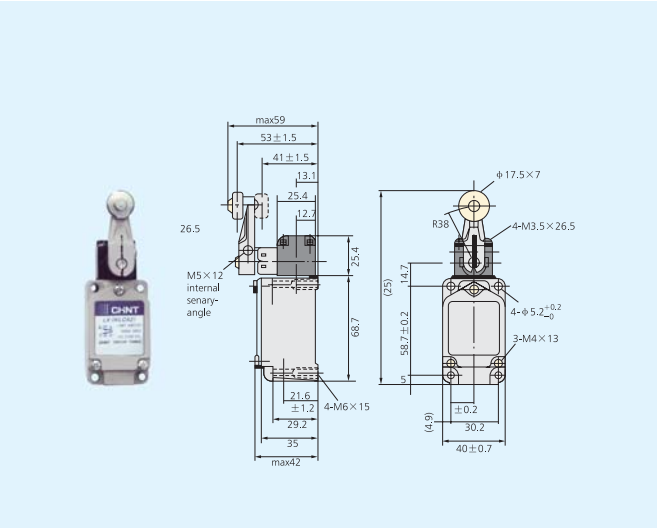

YBLX-WL/CA12

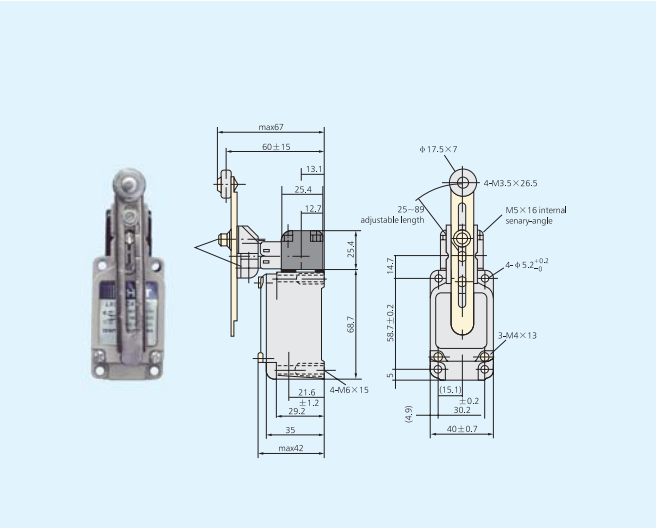

YBLX-WL/D2

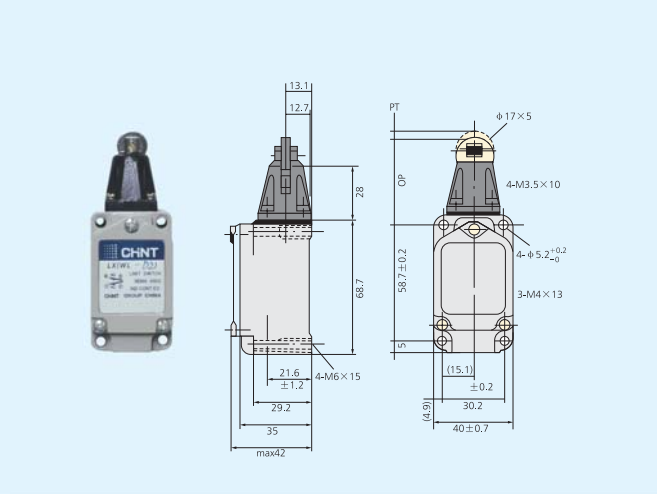

YBLX-WL/D

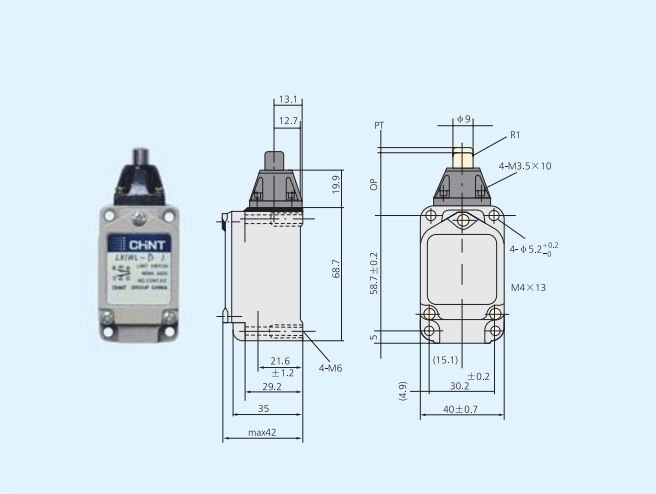

YBLX-WL/NJ

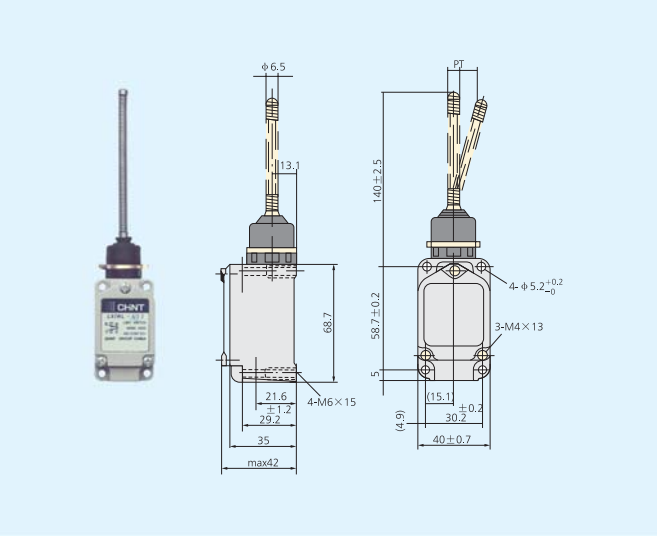

YBLX-WL/NJ/S2

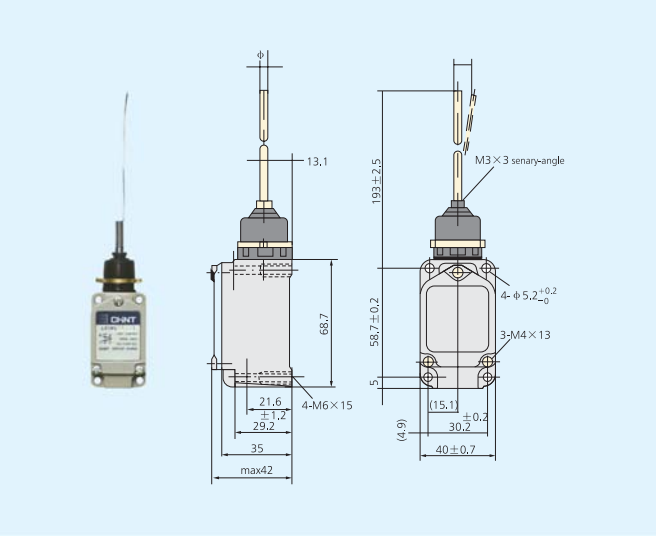

YBLX-WL/CL

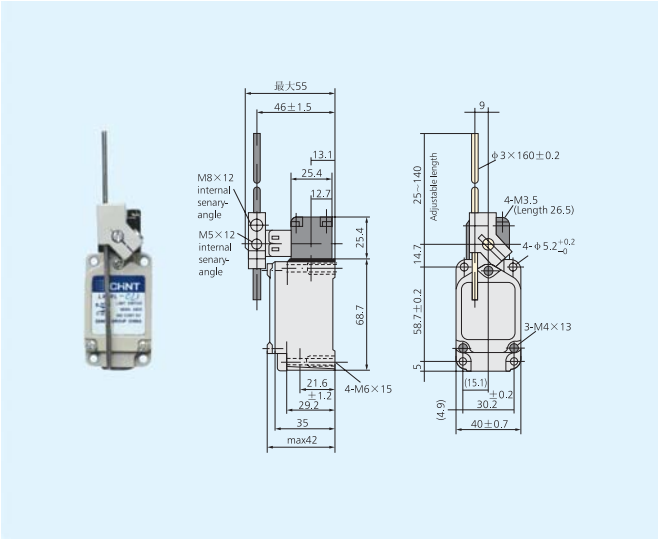

YBLX-WL/HAL4

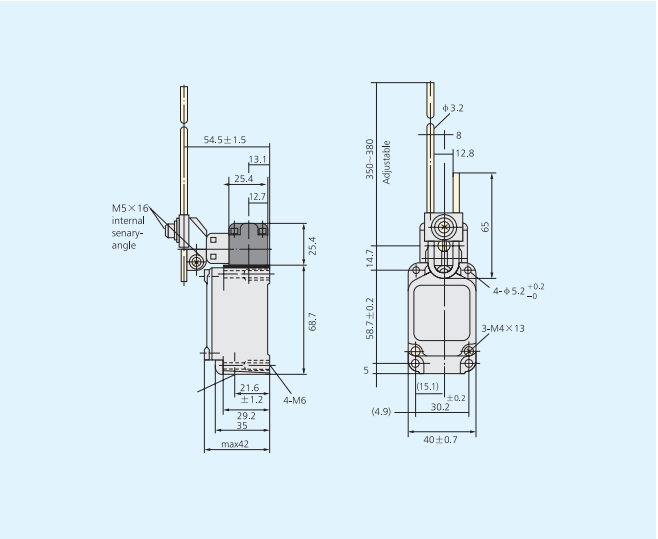

YBLX-WL/NJ/2

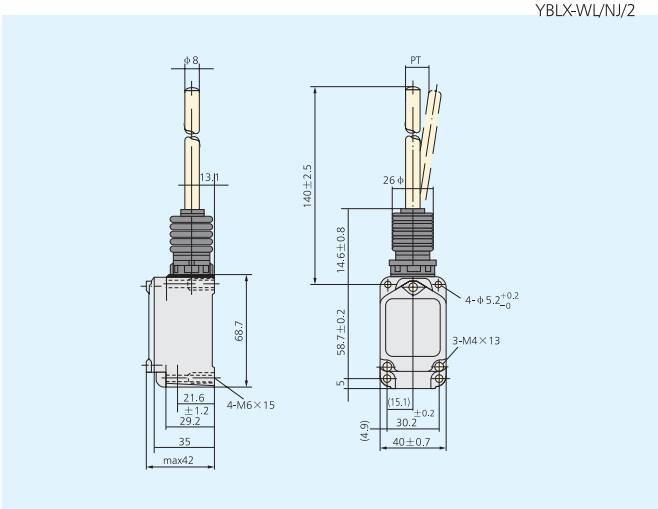

YBLX-WL/HAL5

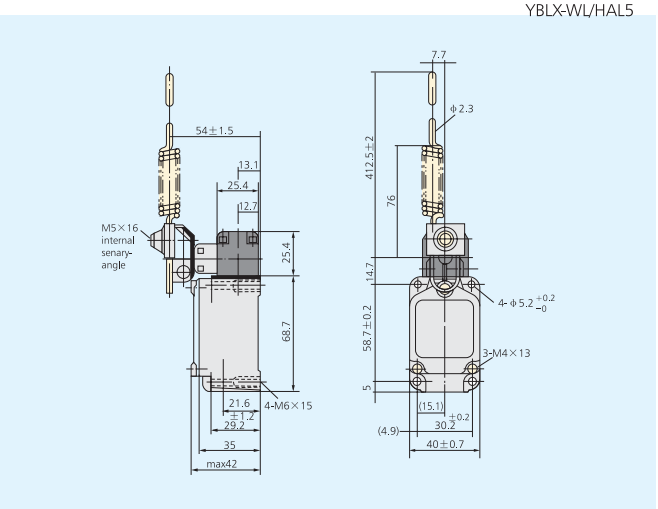

YBLX-WL/D3

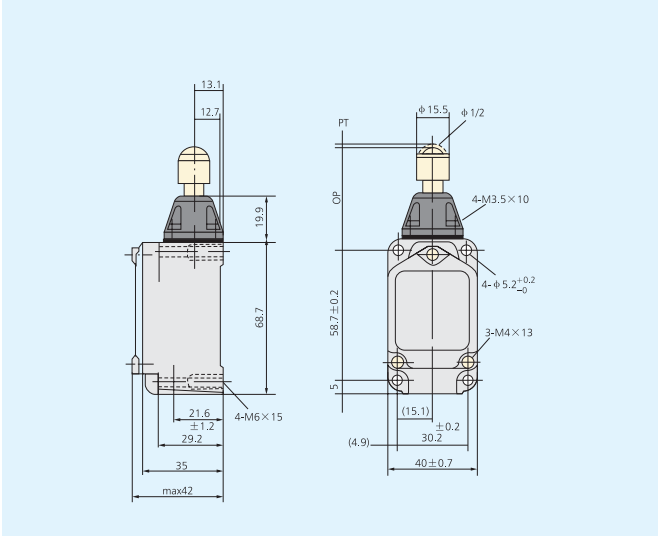

YBLX-WL/CA32/41

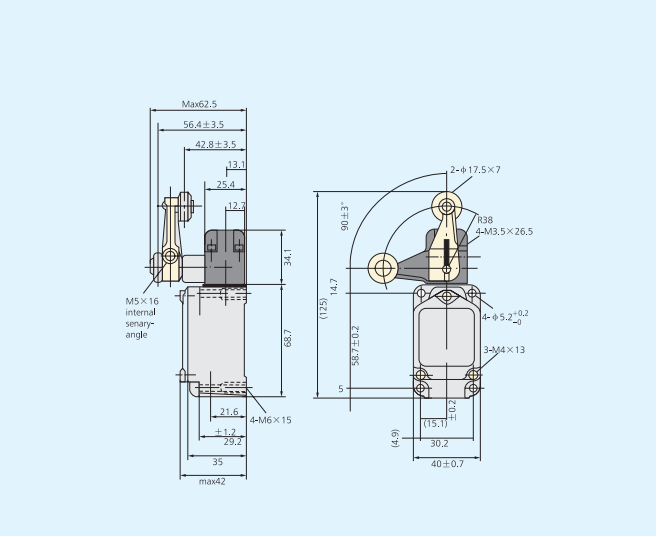

Ukrain	USA

YBLX-HL/5000 Travel Switch

Contacting types

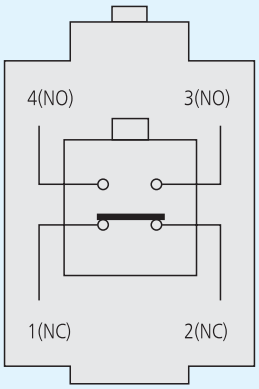

YB LX -HL / □

- Operating mode
- Design sequence number
- Travel switch
- Improved product

Protection level		IP52
Operating frequency (operations minute)	Mechanical	120
	Electric	30
Operating speed		0.005～0.5m/s
Mechanical life (operations)		60×10^4
Electrical life(operations)		30×10^4
Insulation resistance		⩾5MΩ
Contact resistance		⩽200MΩ (initial value)
Environmental temperature		-5℃～+65℃
Relative humidity		⩽95%
Voltage withstand		Between terminals of same polarity (1140V)
		Between electrified components and earth (2500V)
		Between terminals and non-electrifed metal components (2500V)
Rated voltage (V)		AC380V DC220V
Rated current		AC100VA DC30W

Operating performances / Model	YBLX-HL/5000	YBLX-HL/5030	YBLX-HL/5050	YBLX-HL/5100	YBLX-HL/5200	YBLX-HL/5500
OF(max)	16N	16N	16N	20N	20°	
RF(min)	1N	1N	1.5N	1.5N	-	
PT(max)	45°	45°	45°	5mm	5mm	
OT(min)	20°	20°	20°	2mm	2mm	
MD(max)	12°	12°	1mm	1mm	-	
OP	-	-	30±0.8mm	40±0.8mm	-	

Model	Operating mode
YBLX-HL/5000	Rotating arm with roller
YBLX-HL/5030	Rotating adjustable arm with roller
YBLX-HL/5050	Adjustable rotating lever
YBLX-HL/5100	Vertical compressed plunger type
YBLX-HL/5200	Vertical compressed plunge type with roller
YBLX-HL/5300	Free-directions type flexible lever with spring

YBLX-HL/5050

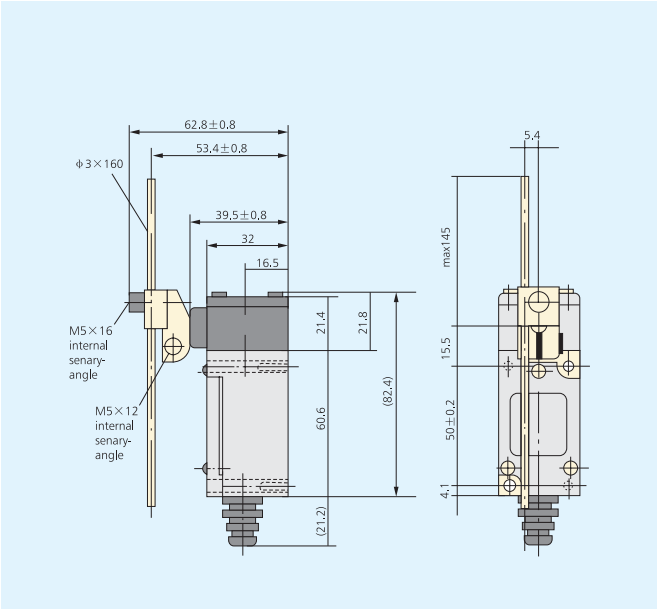

YBLX-HL/5300

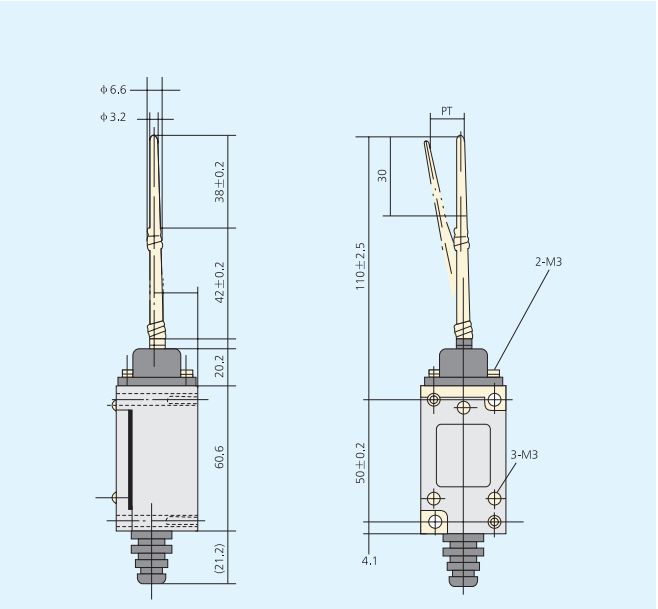

YBLX-HL/5000

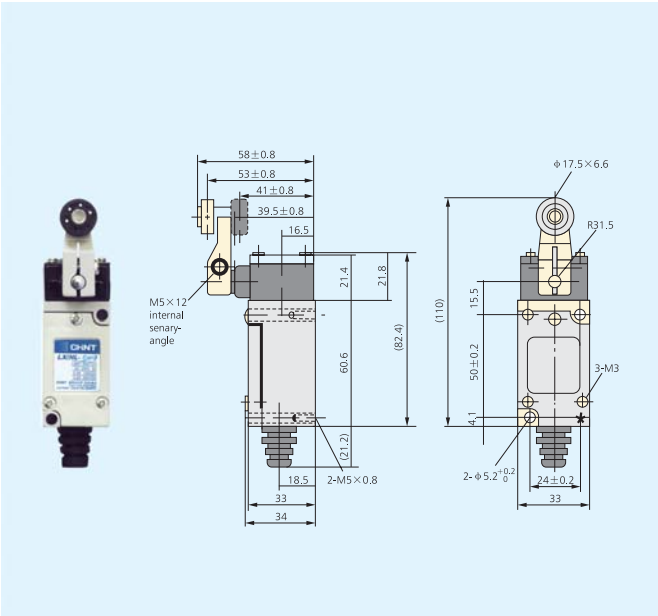

YBLX-HL/5030

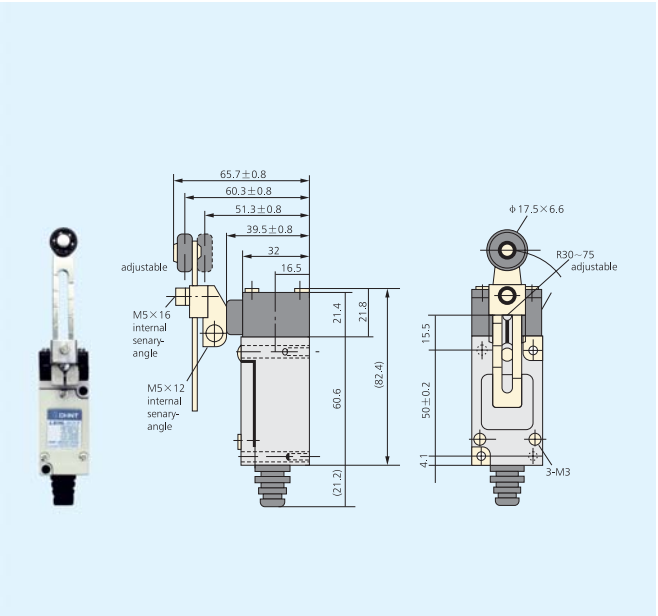

YBLX-HL/5200

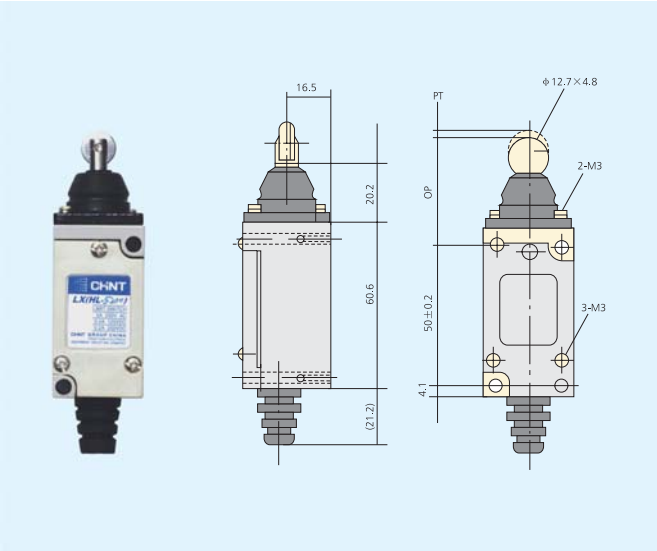

YBLX-HL/5100

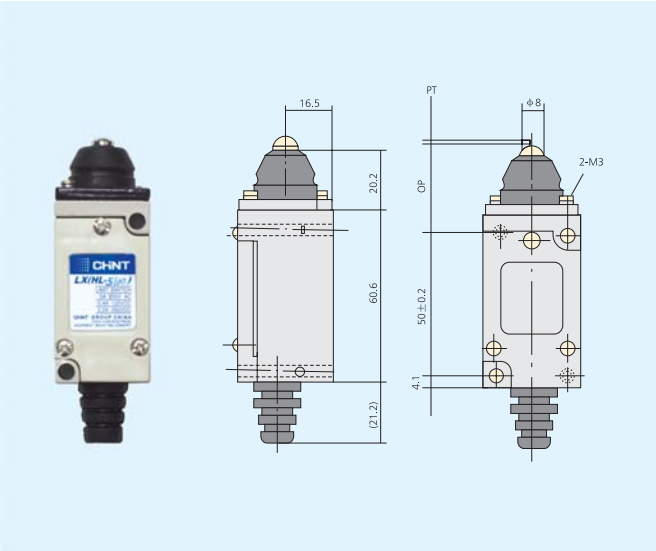

YBLX-HL/5500

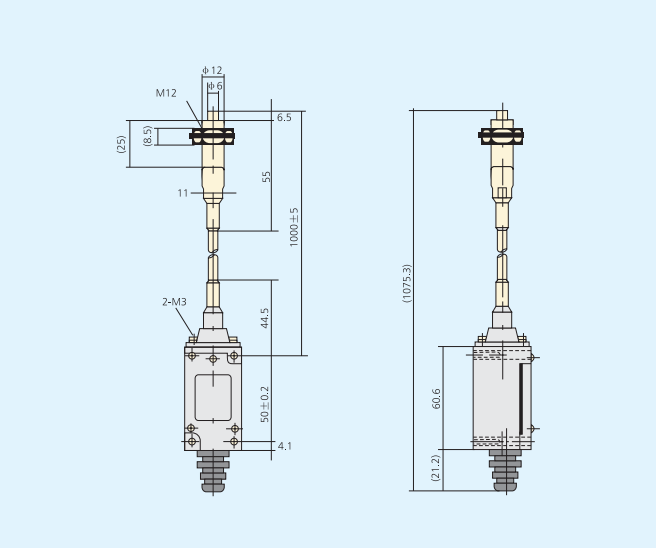

Ukrain	USA

YBLX-CK Travel Switch

Contacting types

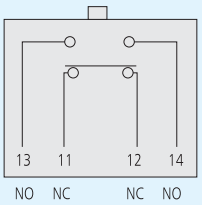

YB LX CK / □ □

- Operating mode
- Design sequence number
- Code of contact operation mode
- Travel switch
- Improved product

Protection level	IP52
Rated operational voltage	AC 380V DC220V
Rated current	AC0.8A DC0.16A
Mechanical life (operations)	100×10^4
Electric life (operations)	30×10^4

Model	Mechanical equipments for construction and public facilities	Food, agriculture, textile, timber, lumber, industry, machine	Packing machine	Machine tool	Assembling machine	Power-drive mounting & dimounting machine
YBLX-CK/J	Not often utilized	Not often utilized	Not often utilized	Utilizable	Most frequently utilized	Most frequently utilized
YBLX-CK/S	Not often utilized	Most frequently utilized	Most frequently utilized	Not often utilized	Not often utilized	Not often utilized
YBLX-CK/M	Most frequently utilized	Utilizable	Most frequently utilized	Utilizable	Utilizable	Most frequently utilized
YBLX-CK/P	Most frequently utilized	Most frequently utilized	Most frequently utilized	Not often utilized	Most frequently utilized	Not often utilized
YBLX-CK/T	Most frequently utilized	Most frequently utilized	Most frequently utilized	Not often utilized	Most frequently utilized	Not often utilized

Model	Direct-driven type	Direct-driven type with steel roller	Direct- driven type with plastic roller	Direct-driven type with plastic roller	Adjustable rotating arm with roller type	Rotating arm type round lever	Free-directions type
YBLX-CK/J	J161	J167		J10511	J10541	J10559	
YBLX-CK/S	S101	S102		S131, 139	S141	S159	
YBLX-CK/M	M110	M102	M121	M115			M106
YBLX-CK/P	P110	P102	P121	P118	P145	P155	P106
YBLX-CK/T	T110	T102		T118			

YBLX-CK/P 106

YBLX-CK/J 10511

YBLX-CK/J 10541

YBLX-CK/P 102

YBLX-CK/M 106

YBLX-CK/T 121

YBLX-CK/M 102

YBLX-CK/M 115

YBLX-CK/M 121

YBLX-CK/P 121

YBLX-CK/P 110

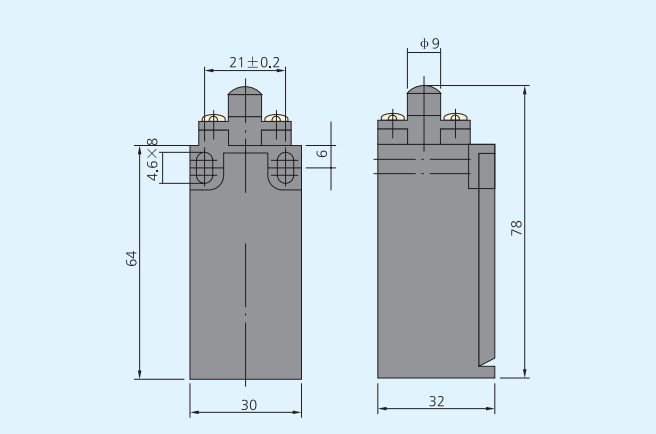

YBLX-CK/J 167

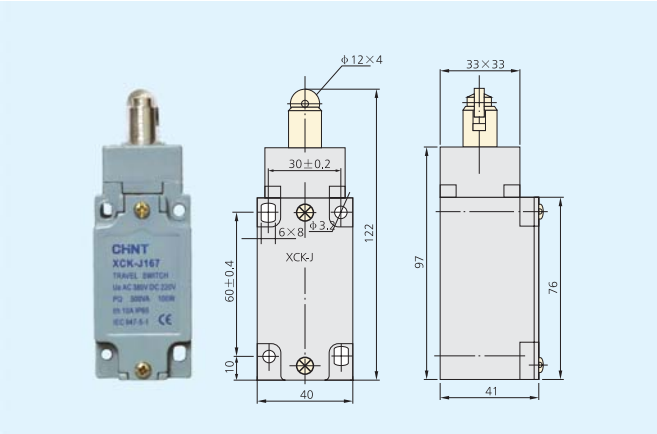

YBLX-CK/S 102

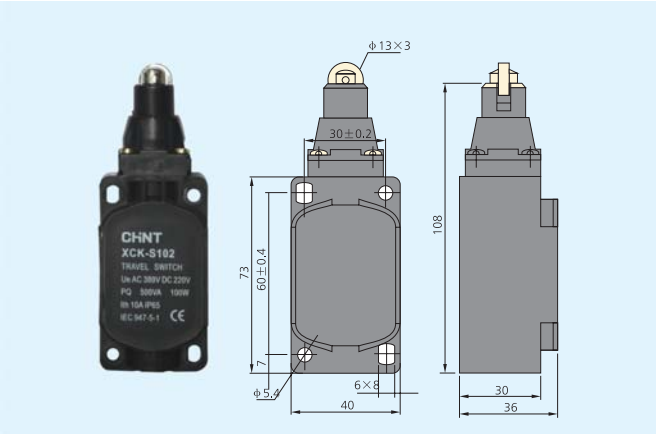

YBLX-CK/M 110

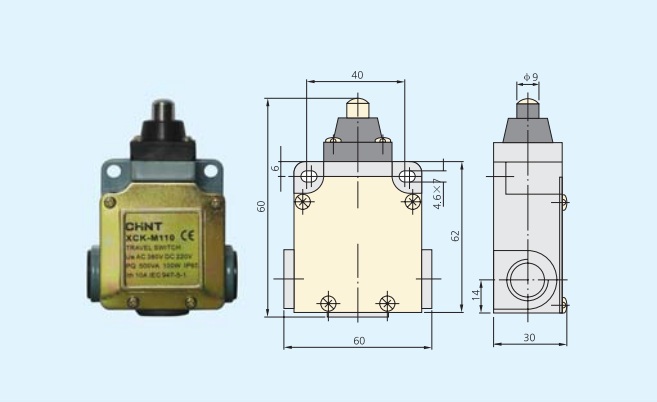

YBLX-CK/T 110

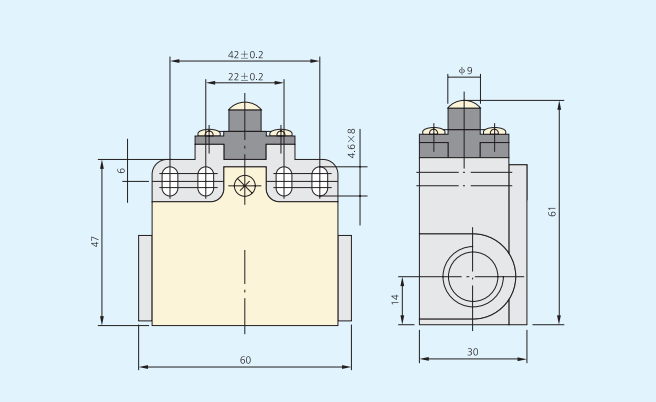

Ukrain	USA

YBLX-P1 Travel Switch

Contacting types

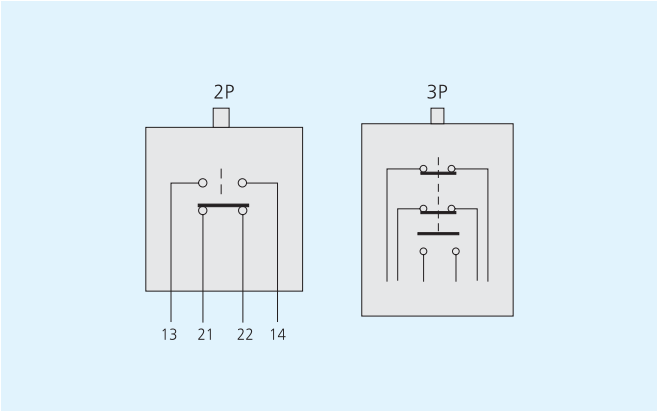

YB LX- P 1 □ / □ □

- Operating mode
- Contact composition
- Component 80 protection type
- Design sequence number
- Common type
- Travel switch
- Improved produet

	2P component	3P component	4P component
1	1 NO+1 NC	1 NO+2 NC	2NO+2NC

2-pole switch compoment

100	3-pole protective type travel switch (wide type)
120	3-pole protective type travel switch (narrow type)
303	3-pole protective type travel switch (wide type)
404	4-pole protective type travel switch (wide type)

Model (recommended)	Operating mode	Substitution model (production stopped)		
YBLX-P1/120/1B	Direct-driven	YBLX-P1/120/0B		
YBLX-P1/120/1C	Direct-driven, buffering	YBLX-P1/120/0C		
YBLX-P1/120/1D	Direct driven, with single roller	YBLX-P1/120/0D		
YBLX-P1/120/1E	Direct-driven with single roller, buffering	YBLX-P1/120/0E		
YBLX-P1/120/1F	Lever, with single roller	YBLX-P1/120/0F		
YBLX-P1/120/1G	Angle of rotating arm adjustable, with single roller	YBLX-P1/120/1H YBLX-P1/120/0H YBLX-P1/120/0G	YBLX-P1/120/1J YBLX-P1/120/0J	YBLX-P1/120/1K YBLX-P1/120/0K

Model (recommended)	Operating mode	Substitution model (production stopped)		
YBLX-P1/120/1P	Length of iron lever adjustable, damping	YBLX-P1/120/1V YBLX-P1/120/0V YBLX-P1/120/0P	YBLX-P1/120/1W YBLX-P1/120/0W	YBLX-P1/120/1Q YBLX-P1/120/0Q
YBLX-P1/120/1R	Free-directions type	YBLX-P1/120/0R		
YBLX-P1/120/1T	No self-reset of roller	YBLX-P1/120/0T		
YBLX-P1/120/1U	Length of single lever adjustable, with single roller	YBLX-P1/120/0U	YBLX-P1/120/0N	YBLX-P1/120/0N
YBLX-P1/100/1B	Direct-driven	YBLX-P1/100/0B		
YBLX-P1/100/1C	Direct-driven, buffering	YBLX-P1/100/0C		
YBLX-P1/100/1D	Direct driven, with single roller	YBLX-P1/100/0D		
YBLX-P1/100/1E	Direct-driven with single roller, buffering	YBLX-P1/100/0E		
YBLX-P1/100/1F	Lever, with single roller	YBLX-P1/100/0F		
YBLX-P1/100/1G	Angle of rotating arm adjustable, with single roller	YBLX-P1/100/1H YBLX-P1/100/0H YBLX-P1/100/0G	YBLX-P1/100/1J YBLX-P1/100/0J	YBLX-P1/100/1K YBLX-P1/100/0K
YBLX-P1/100/1P	Length of iron lever adjustable, damping	YBLX-P1/100/1V YBLX-P1/100/0V YBLX-P1/100/0P	YBLX-P1/100/1W YBLX-P1/100/0W	YBLX-P1/100/1Q YBLX-P1/100/0Q
YBLX-P1/100/1R	Free-directions type	YBLX-P1/100/0R		
YBLX-P1/100/1T	Length of single lever adjustable, with single roller	YBLX-P1/100/0T		
YBLX-P1/100/1U	Direct-driven	YBLX-P1/100/0U	YBLX-P1/100/0N	YBLX-P1/100/0N
YBLX-P1/303/1B	Direct-driven, buffering	YBLX-P1/303/0B		
YBLX-P1/303/1C	Direct driven, with single roller	YBLX-P1/303/0C		
YBLX-P1/303/1D	Direct-driven with single roller, buffering	YBLX-P1/303/0D		
YBLX-P1/303/1E	Lever, with single roller	YBLX-P1/303/0E		
YBLX-P1/303/1F	Angle of rotating arm adjustable, with single roller	YBLX-P1/303/0F		
YBLX-P1/303/1G	Length of single lever adjustable, with single roller	YBLX-P1/303/1H YBLX-P1/303/0H YBLX-P1/303/0G	YBLX-P1/303/1J YBLX-P1/303/0J	YBLX-P1/303/1K YBLX-P1/303/0K
YBLX-P1/303/1P	Length of iron lever adjustable, damping	YBLX-P1/303/1V YBLX-P1/303/0V YBLX-P1/303/0P	YBLX-P1/303/1W YBLX-P1/303/0W	YBLX-P1/303/1Q YBLX-P1/303/0Q
YBLX-P1/303/1R	Free-directions type	YBLX-P1/303/0R		
YBLX-P1/303/1T	No self-reset of roller	YBLX-P1/303/0T		
YBLX-P1/303/1U	Length of single lever adjustable, with single roller	YBLX-P1/303/0U		
YBLX-P1/404/1B	Direct-driven	YBLX-P1/404/0B		
YBLX-P1/404/1C	Direct-driven, buffering	YBLX-P1/404/0C		
YBLX-P1/404/1D	Direct driven, with single roller	YBLX-P1/404/0D		

Model (recommended)	Operating mode	Substitution model (production stopped)		
		YBLX-P1/404/0E YBLX-P1/404/0F YBLX-P1/404/1H		
YBLX-P1/404/1E	Direct-driven with single roller, buffering	YBLX-P1/404/0H	YBLX-P1/120/1W	YBLX-P1/120/1Q
YBLX-P1/404/1F	Lever, with single roller	YBLX-P1/404/0G	YBLX-P1/120/0W	YBLX-P1/120/0Q
YBLX-P1/404/1G	Length of single lever adjustable, with single roller	YBLX-P1/404/1V YBLX-P1/404/0V YBLX-P1/404/0P	YBLX-P1/404/1J YBLX-P1/404/0J	YBLX-P1/404/1K YBLX-P1/404/0K
YBLX-P1/404/1P	Length of iron lever adjustable, damping	YBLX-P1/404/0R YBLX-P1/404/0T YBLX-P1/404/0U	YBLX-P1/404/1W YBLX-P1/404/0W	YBLX-P1/404/1Q YBLX-P1/404/0Q
YBLX-P1/404/1R	Free-directions type			
YBLX-P1/404/1T	No self-reset of roller			
YBLX-P1/404/1U	Length of single lever adjustable, with single roller			

Rated operational voltage (V)	AC380V DC220V
Rated current	AC5A DC0.15A
Conventional heating current (A)	10
Protection degree	IP52
Mechanical life (operations)	30×10^5
Electric life (operations)	Ie= 5A/AC-15: 60×10^4
	Ie= 0.15A/DC-13: 20×10^4
Environmental temperature	-25℃～+40℃
Relative humidity	≤95%
Altitude	≤2000m
Application	Automatic control, limitation operation, operation of transmission mechanism and program control of machine tool.

YBLX-P1//120/1R

YBLX-P1/100/1R

YBLX-P1/120/1U(1N)

YBLX-P1/120/1E

YBLX-P1/120/1G(H,J,K)

YBLX-P1/100/1G(H,J,K)

YBLX-P1/100/1E

YBLX-P1/120/1C

YBLX-P1/120/1D

YBLX-P1/120/1F

Unlocking type

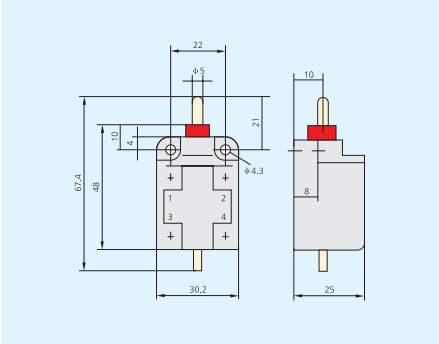

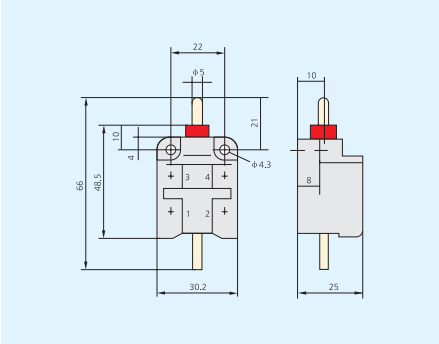

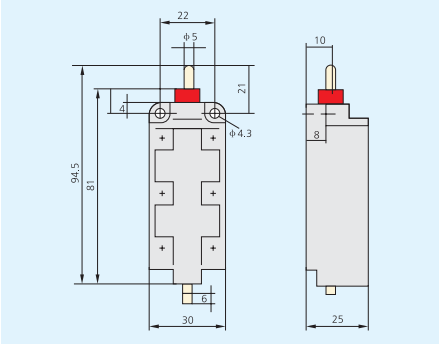

Protective cover

YBLX-P1/100 series

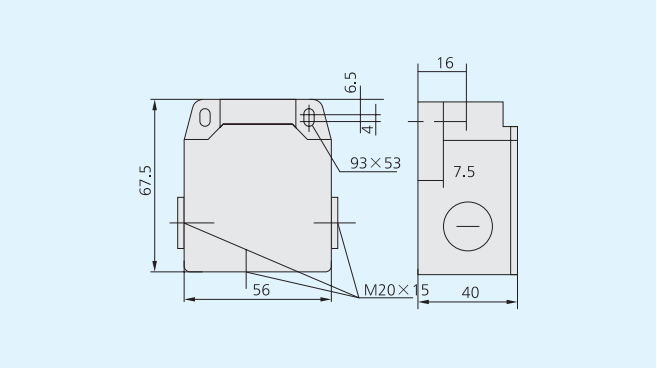

YBLX-P1/120 series

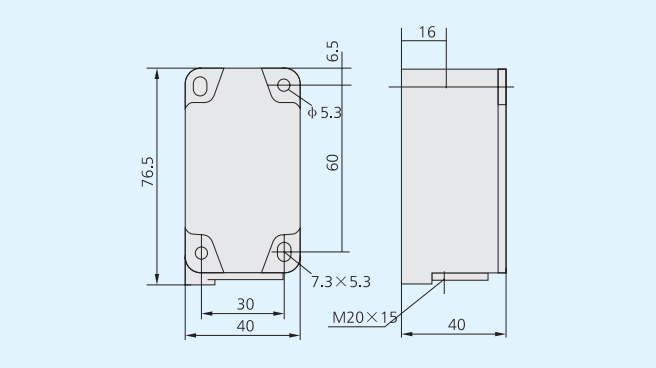

YBLX-P1/303 series

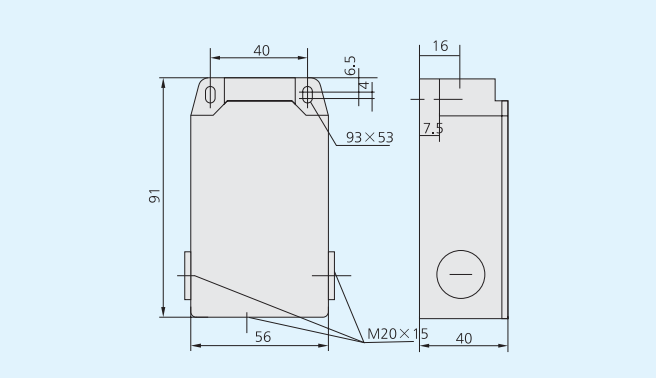

YBLX-P1/404 series

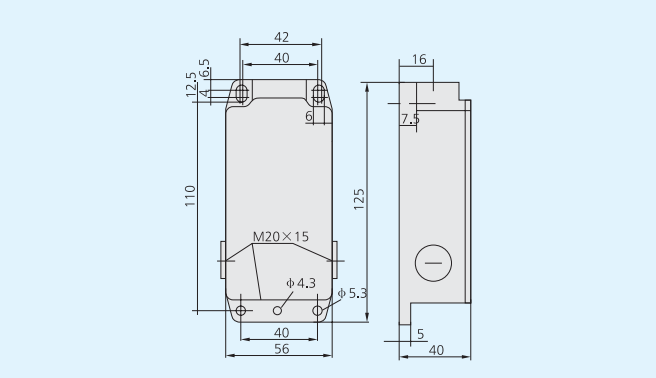

Driven head style & data

Type B

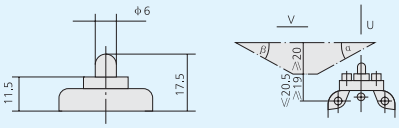

YBLX-P1/100/B
YBLX-P1/120/B
YBLX-P1/303/B
YBLX-P1/404/B

α max=30°
β max=30°
V max=0.5m/s
U max=1.5m/s

Type C

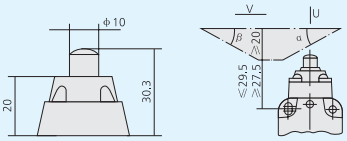

YBLX-P1/100/C
YBLX-P1/120/C
YBLX-P1/303/C
YBLX-P1/404/C

α max=30°
β max=30°
V max=0.5m/s
U max=1.5m/s

Type D

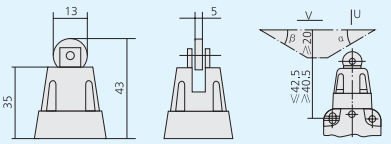

YBLX-P1/100/D
YBLX-P1/120/D
YBLX-P1/303/D
YBLX-P1/404/D

α max=30°
β max=30°
V max=1.0m/s
U max=1.5m/s

Type E

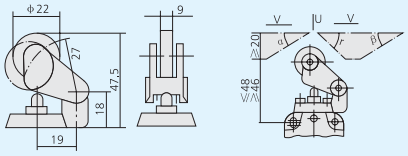

YBLX-P1/100/E
YBLX-P1/120/E
YBLX-P1/303/E
YBLX-P1/404/E

α max=30°
V max=1.0m/s
Y max=45°
β max=45°
V max=2.5m/s
U max=1.5m/s

Type F

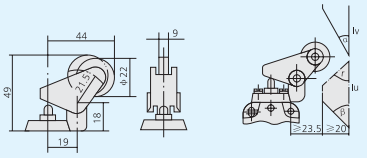

YBLX-P1/100/F
YBLX-P1/120/F
YBLX-P1/303/F
YBLX-P1/404/F

α max=30°
V max=1.0m/s
Y max=45°
β max=45°
V max=2.5m/s

Type G、H、J、K

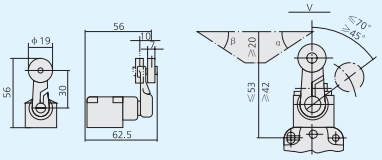

YBLX-P1/100/G,J,H,K,
YBLX-P1/120/G,J,H,K,
YBLX-P1/303/G,J,H,K,
YBLX-P1/404/G,J,H,K,

α max=30°
β max=30°
V max=3.0m/s

Type R

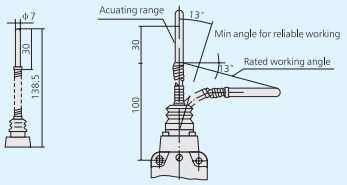

YBLX-P1/100/R
YBLX-P1/120/R
YBLX-P1/303/R

V max=1m/s

Type T

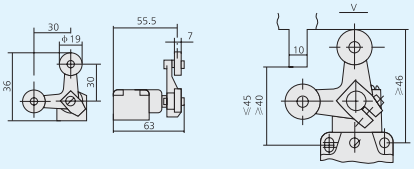

YBLX-P1/100/T
YBLX-P1/120/T
YBLX-P1/303/T

V max=3m/s

Type U、N

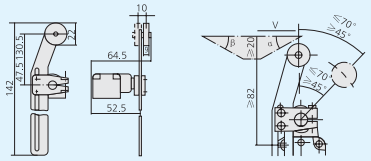

YBLX-P1/100/U,N
YBLX-P1/120/U,N
YBLX-P1/303/U,N
YBLX-P1/404/U,N

α max=30°
β max=30°
V max=3.0m/s

Type P、Q、W、V

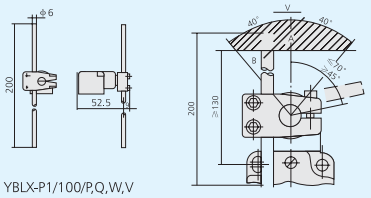

YBLX-P1/100/P,Q,W,V
YBLX-P1/120/P,Q,W,V
YBLX-P1/303/P,Q,W,V
YBLX-P1/404/P,Q,W,V

V max=3.0m/s

Ukrain	USA

YBLX-K1 Travel Switch

Contacting types

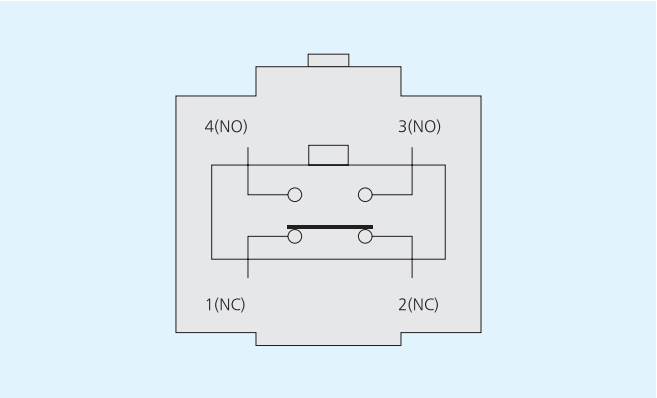

YB LX-K 1/□ 1 1□

- Derivative code: M: enclosed type
- 1 NC contact
- 1 NO contact
- 1: single roller
  2: double rollers
  3: plunger type
  4: plunger type with roller
  5: free-directions type
  6: Rear mounting of single roller
  7: Rear mounting of double roller
- Design sequence number
- Fast operation
- Travel switch
- New product code

Model	Mode	Substitution model (production stopped)	
YBLX-K1/111	Automatic reset of single roller		
YBLX-K1/211	Non-automatic reset of double rollers		
YBLX-K1/311	Automatic reset of plunger	YBLX-25/311S	YBLX-25/311
YBLX-K1/411	Automatic reset of plunger roller	YBLX-25/411S	YBLX-25/411
YBLX-K1/511	Automatic reset of free-directions type	YBLX-25/511S	YBLX-25/511
YBLX-K1/611	Self-reset of rear mounted single roller	YBLX-25/611S	YBLX-25/611
YBLX-K1/711	Non-self-reset of rear mounted single roller	YBLX-25/711S	YBLX-25/711

Protection degree	IP52
Conventional heating current	5A
Rated voltage	AC 380V DC220V
Rated current4	AC 5A DC0.15A
Operating frequency (operations/minute)	20
Lasting ratio of electrification	40%
Mechanical life (opertions)	$60x10^4$
Electric life (opertions)	$30x10^4$
Environmental temperature	-30℃～+40℃

Protection degree	IP52
Relative humidity	≤85%(20℃)
Altitude level	≤2000m
Voltage withstands	Between terminals of same polarity (1140V)
	Between electrified components and earth (2500V)
	Between terminals and un-electrified metal components (2500V)
Application range	Automatic control of machine tool, restriction of operating structure operation or control of procedure
Standards	IEC60947-5-1

Operating performances \ Model	YBLX-K1-111	YBLX-K1-211	YBLX-K1-311	YBLX-K1-411
OF(max)	10N	25N	20N	20N
PT(max)	≤45°	≤70°	≤5mm	≤5mm
OT(min)	≥15°	-	≥1mm	≥1mm

YBLX-K1/111

YBLX-K1/211

YBLX-K1/411

YBLX-K1/K

YBLX-K1/611

YBLX-K1/511

YBLX-K1/711

YBLX-K1/311

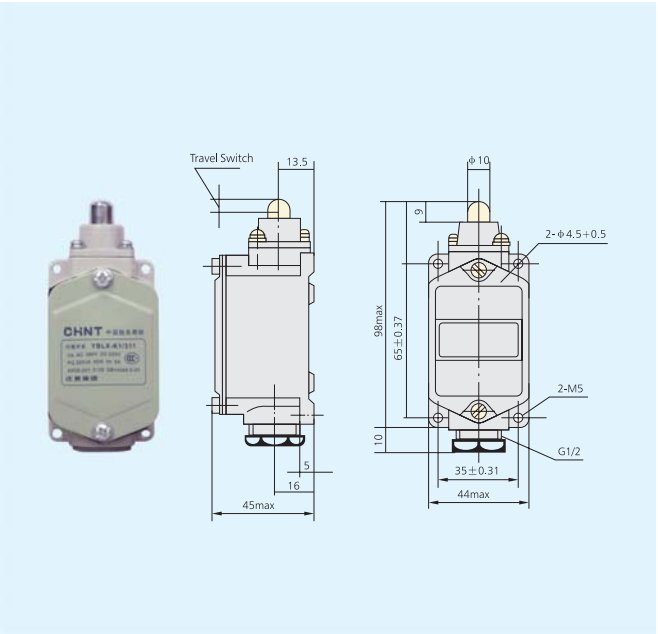

Ukrain	USA

YBLX-K2 Travel Switch

Contacting types

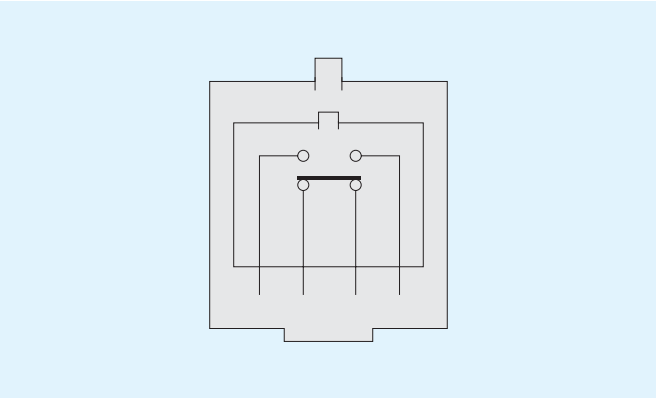

YB LX-K 2/□ □ □

- 1 NC contact
- 1 NO contact
- 1: with single roller
- 2: with double roller
- 3: plunger type
- 4: plunger type with roller
- Design sequence number
- Fast operation
- Travel switch
- Improved product

Conventional heating current (A)	5A
Rated voltage (V)	AC 380V DC 220V
Rated current	AC 0.8A DC 0.16A
Operating frequency (operations/minute)	160
Mechanical life (operations)	60×10^4
Environmental temperature	-25℃～+40℃
Relative humidity	≤90%
Altitude	≤2000m
Voltage withstand	Between electrified components and the earth
	Between electrified components of the same polarity
Application range	Travel control and limitation protection in control circuits
Standard	IEC60947-5-1

Operating performances \ Model	YBLX-K2/001	YBLX-K2/101	YBLX-K2/111、131
OF(max)	6N	7N	7N
RF(min)	≥1.5N	≥1.5N	≥2N
PT(max)	2±0.7mm	5±0.7mm	15° ±7°
MD(max)	≤1.5mm	≤1.5mm	≤1.5mm
OT(min)	≥2mm	≥2mm	≥15°

Model (recommended)	Operating mode	Substitution type (production stopped)	
YBLX-K2/111	Self-reset of single roller	YBLX-K2/121	YBLX-K2/131
YBLX-K2/211	Non-self-reset of single roller		
YBLX-K2/311	Self-reset of plunger type	YBLX-K2/001	
YBLX-K2/411	Non-self-reset of plunger roller type	YBLX-K2/101	

YBLX-K2/111

YBLX-K2/211

YBLX-K2/411K

YBLX-K2/101、YBLX-K2/411

YBLX-K2/001、YBLX-K2/311

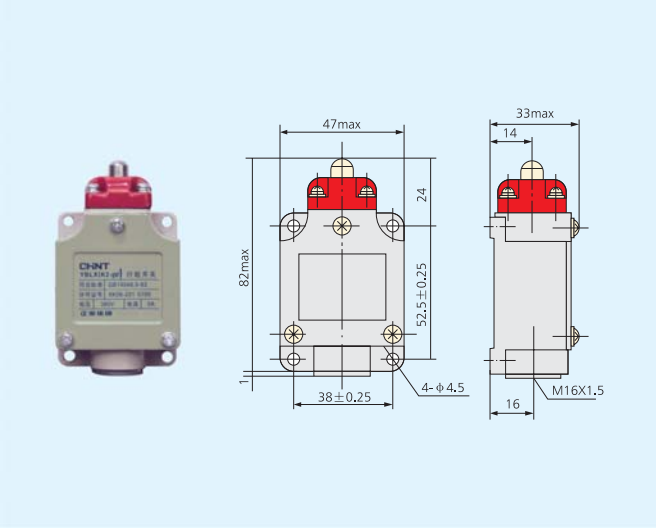

Ukrain	USA

YBLX-K3 Travel Switch

Contacting types

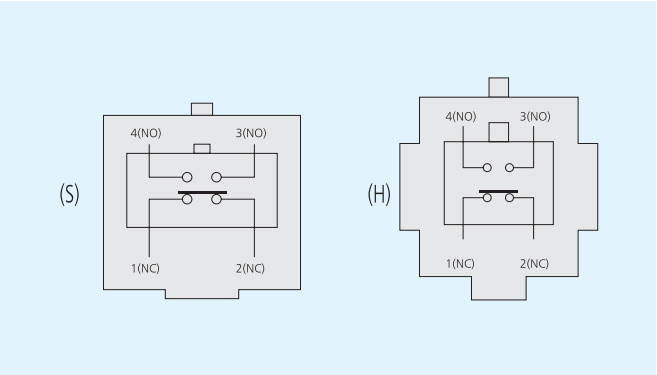

YB LX-K 3/2 0 □/□

- Operating mode. As for code explanation, please refer to table below
- Protective case type; K: no protective case, unlocking type
  S: vertical protective case, with an outlet wire orifice in bottom
  H: horizontal protective case, with an outlet wire orifice in bottom and each side
- Contact assembly type
- Pair number of contact
- Design sequence number
- Fast operation
- Travel switch
- Improved product

Symbol	Definition
Z	Plunger type
L	Plunger with roller type
B	Rotating arm with roller type
T	Adjustable rotating arm with roller type
D	Flexible rocker type
J	Adjustable metal rocker type
H1	Fork type with 2 rollers at same direction
H2	Fork type with the left roller forwardly and the right roller backwardly mounted
H3	Fork type with the right roller forwardly and the left roller backwardly mounted
W	Free-directions type

Operating performances \ Model	YBLX-K3/20 S/H/Z YBLX-K3/20 S/H/L	YBLX-K3/20 S/H/B YBLX-K3/20 S/H/T YBLX-K3/20 S/H/J	YBLX-K3/20 S/H/D	YBLX-K3/20 S/H/H1 YBLX-K3/20 S/H/H2 YBLX-K3/20 S/H/H3	YBLX-K3/20 S/H/W
OF(max)	30N	0.3Nm	0.3Nm	0.2Nm	0.038Nm
RF(min)	5N	0.06Nm	0.03Nm	-	0.015Nm
PT(max)	3mm	30°	30°	80°	30°
MD(max)	1.2mm	15°	20°	60°	15°
TTP(max)	6.0mm	60°	50°	90°	-

Protection degree	IP52
Rated voltage (V)	AC 380V DC220V
Rated current	AC 5A DC0.15A
Operating frequency (operations/minute)	20
Mechanical life (operations)	Z $60X10^4$
	H1 $60X10^4$
Electric life (operations)	AC $150X10^4$
	DC $20X10^4$
Environmental temperature	-5℃～+40℃
Relative humidity	≤90%
Altitude	≤2000m
Voltage withstand	Between terminals of same polarity (AC 1140V)
	Between electrified components and earth (AC 2500V)
Application range	Manipulation, control, limit, signal, interlock in control circuits and auxiliary circuits. Its typical purpose is to control the AC and DC electromagnetic.
Standard	IEC60947-5-1

YBLX-K3/20S/Z

YBLX-K3/20H/D

YBLX-K3/20S/W

YBLX-K3/20S/B

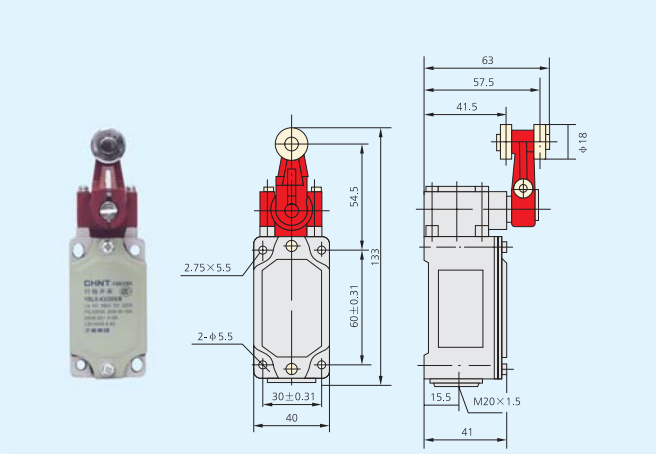

YBLX-K3/20S/T

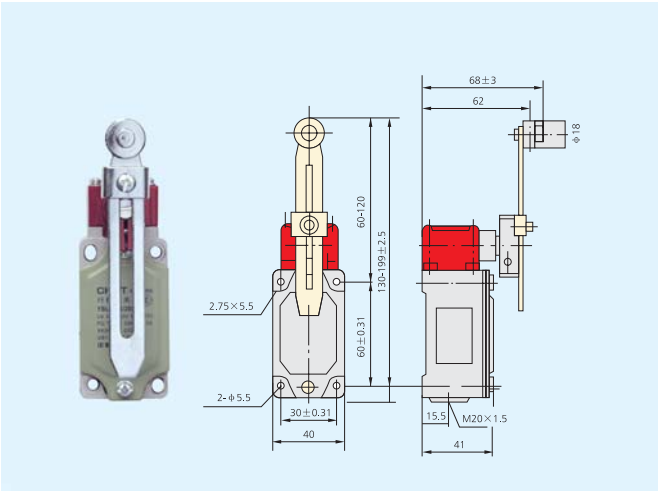

YBLX-K3/20S/H1, H2, H3

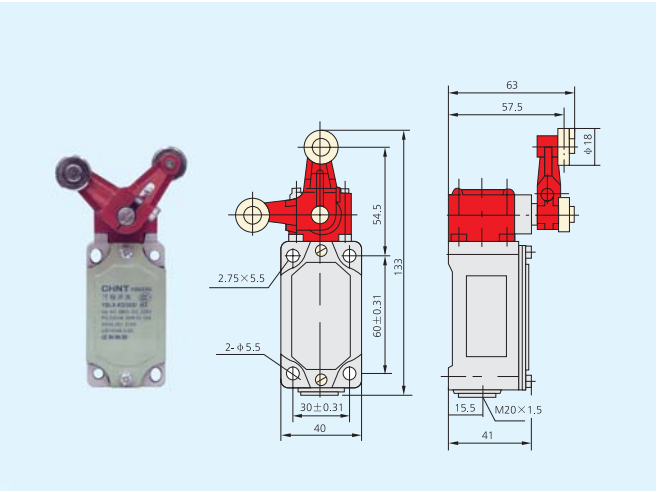

Ukrain	USA

YBLX-1 Travel Switch

Contacting types

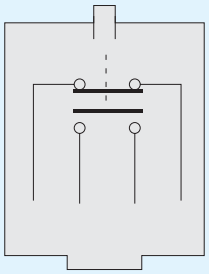

YB LX - 1/1 1□

- K: Unlocking type
- Number. of NC contact
- Number. of NO contact
- Design sequence number
- Travel switch
- Improved product

Conventional heating current (A)	5A
Rated voltage (V)	AC 380V DC220V
Rated current	AC 0.53A DC0.23A
Operating frequency(operations/minute)	3
Mechanical life (operations)	$300x10^4$
Electric life (operations)	$30x10^4$
Environmental temperature	-25℃～+40℃
Relative humidity	≤90%
Altitude	≤2000m
Operating travel	7±2mm
Over Travel	≥1mm
Operating force	≤30N
Voltage withstands	Between terminals of the same polarity (1140V)
	Between electrified components and earth (2500V)
	Between terminals and un-electrified metal components (2500V)
Application range	To control travel of operating structure of which speed is no less than 0.1ms or to change its operating direction and speed
Standard	IEC60947-5-1

YBLX-1/01K

YBLX-1/02K

YBLX-1/11K

YBLX-1/11H

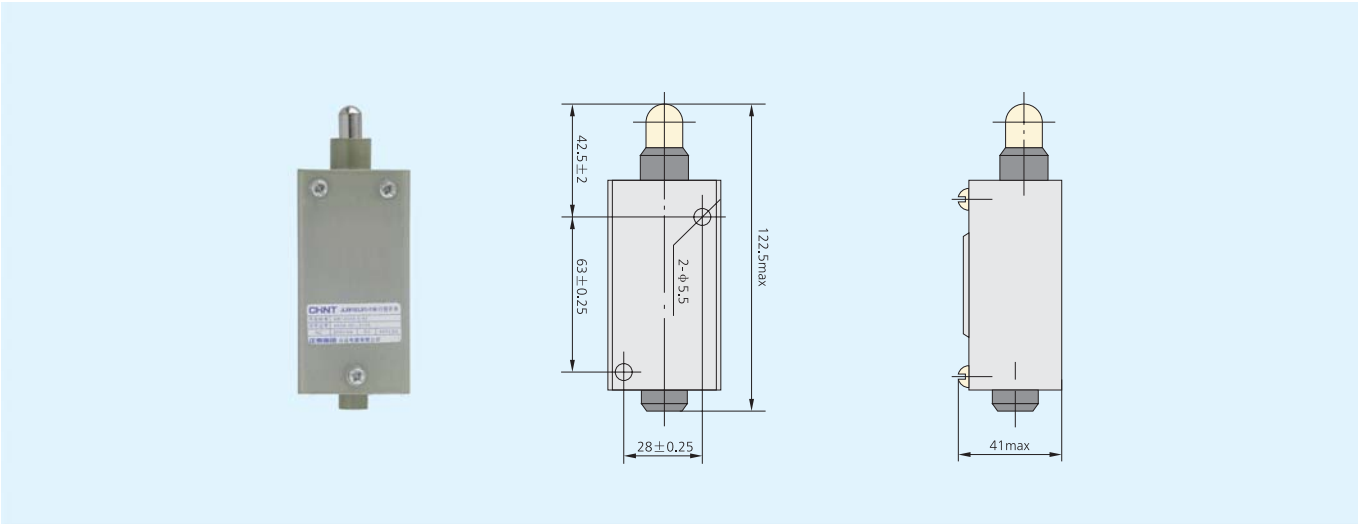

Ukrain	USA

YBLX-2 Travel Switch

Contacting types

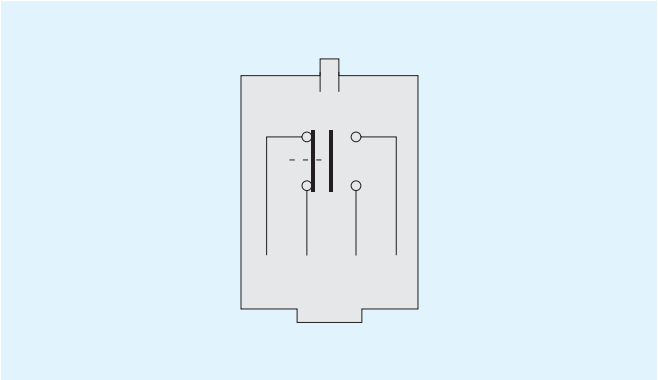

YB LX - 2/□ □ □ □

- A: modified structure
- 1: automatic reset
- 1: roller mounted in interior part
  "2" roller mounted in the middle part
  "3" roller mounted in exterior part
- 1: single roller; 2: double rollers.
- Design sequence number
- Travel switch
- Improvect product

Conventional heating current	10A
Rated voltage	AC 380V
Rated current	AC 2A
Operating frequency(operations/minute)	3
Mechanical life	$50x10^4$
Electric life	$20x10^4$
Environmental temperature	-25℃～+40℃
Relative humidity	≤90%
Altitude	≤2000m
Operating travel	≤20°
Over Travel	≥3°
Operating force	≤40N
Voltage withstands	Between terminals of the same polarity (1140V)
	Between electrified components and earth (2500V)
	Between terminals and un-electrified metal components (2500V)
Application range	Control travel of operating mechanism or change its moving direction or speed
Standard	IEC60947-5-1

Model	Structure and mounting of transmission
YBLX-2/111	1 roller mounted inside of "—" shape handspike
YBLX-2/121	1 roller mounted inside of the groove of "—" handspike
YBLX-2/131	1 roller mounted outside of "—" shape handspike
YBLX-2/222	2 roller mounted inside of "人" shape handspike
YBLX-2/232	2 rollers mounted on "人" shape handspike, with one inside and the other outside

YBLX-2/111

YBLX-2/131

YBLX-2/212、222、232

YBLX-2/121

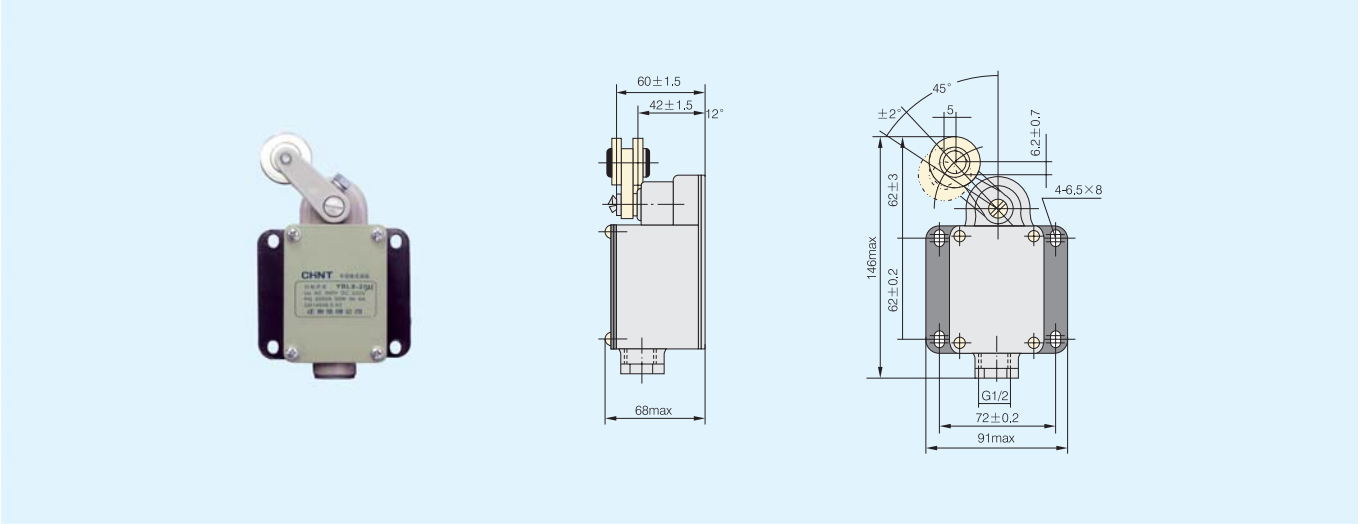

Ukrain	USA

YBLX-3 Travel Switch

Contacting types

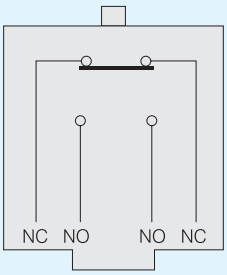

YB LX-3/1 1 □

- K: unlocking type
- No. of NC contact
- No. of NO contact
- Design sequence number.
- Travel switch
- Improved product

Conventional heating current	5A
Rated voltage	AC 380V DC220V
Rated current	AC 0.79A DC0.27A
Operating frequency(operations/minute)	3
Mechanical life(operations)	$60x10^4$
Electric life(operations)	$30x10^4$
Environmental temperature	-25℃～+40℃
Relative humidity	≤90%
Altitude	≤2000m
Operating travel	≤15mm
Over Travel	1mm
Operating force	≤30N
Voltage withstands	Between terminals of the same polarity (1140V)
	Between electrified components and earth (2500V)
	Between terminals and un-electrified metal components (2500V)
Application range	To control travel of operating structure of which speed is no less than 0.1 meter/min, or to change operating direction or speed.
Standard	IEC60947-5-1

YBLX-3/11K

YBLX-3/11H

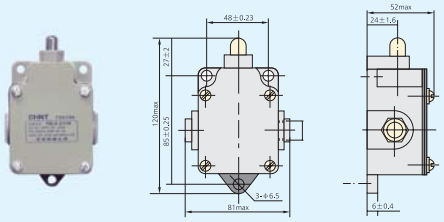

Ukrain	USA

YBLX-4 Travel Switch

Contacting types

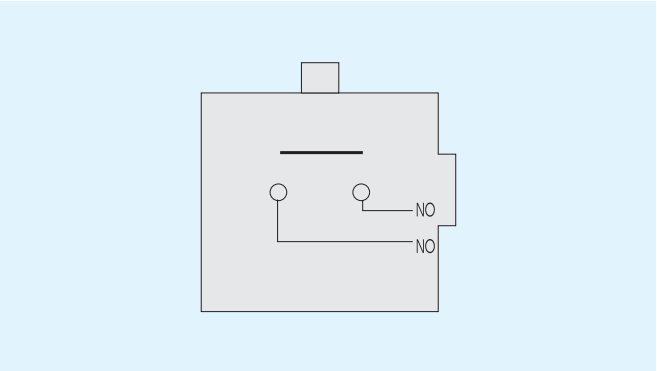

YB LX-4/□ □ □

- S: with enclosure ring
- Number. of controlled circuits
- Operating mode, refer to table below for definition of number
- Design sequence number
- Travel switch
- Improved product

Conventional heating current (A)	20A
Rated voltage (V)	AC 380V DC220V
Rated current	AC 2.63A DC0.82A
Operating frequency(operations/minute)	2.5
Altitude	≤2000m
Environmental temperature	-30℃～+40℃
Relative humidity	≤85%

Digital code	Operating mode	Applicable occasions
1	Operation of single arm with roller	Translating mechanism with normal inertial travel distance
2	Actuate 2 rotating positions of fork arm with roller	Translating units with large inertial travel distance
3	Actuate lever on-load with balanced hammer	Lifting units
4	Actuate 3 position-change-over devices with trinacri form arm	Translating units with 3 actuating positions
6	Actuate 2 position-change-over devices with roller-equipped double arms	Translating units with fast speed

YBLX-4/11S、YBLX-4/12S

YBLX-4/21S、YBLX-4/22S

YBLX-4/21、YBLX-4/22

YBLX-4/31、YBLX-4/32

YBLX-4/11、YBLX-4/12

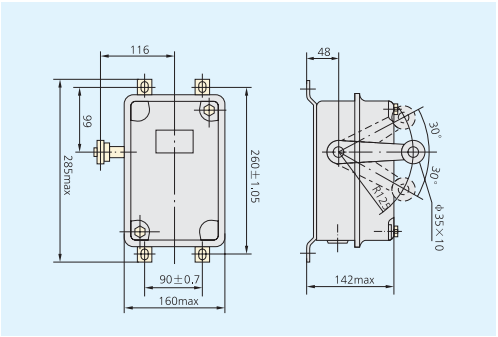

Ukrain	USA

YBLX-5 Travel Switch

Contacting types

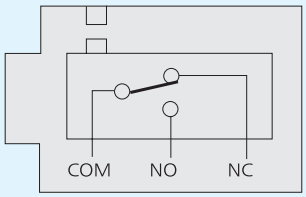

YB LX - 5/□ □ □ □

- Number of switch components mounted inside the case
- Y: connection through bolt, blank: connection through welding slice
- Transmission mode. Refer to the aside table for definition of letters
- Number. of NC contact
- Number. of NO contact
- Design sequence number
- Travel switch
- Improved produet

Letter	Designation
D	Projecting button type
Q	Protective type
H	With buffering spring type
G1	Short lever transmission type
G2	Long lever transmission type
N1	Short lever with roller type
N2	Long lever with roller type
Blank: the common type	

Conventional heating current (A)	3A
Rated voltage (A)	AC 380V DC 220V
Rated current	AC 0.26A DC0.14A
Operating frequency(operations/minute)	40
Mechanical life (operations)	60×10^4
Electric life (operations)	30×10^4
Environ mental temperature	-25℃～+40℃
Altitude	≤2000m
Voltage withstands	Between electrified components and earth (2500V)
	Between electrified components of different polarity (1140V)
Application range	Applied in control circuits to control the travel
Standards	IEC60947-5-1

Model	OF	RF	OT
YBLX-5/11	≤10N	≥1N	≥0.2mm
YBLX-5/11D	≤10N	≥1N	≥1mm
YBLX-5/11H	≤10N	≥1N	≥2mm
YBLX-5/11N1	≤7N	≥0.5N	≥2mm
YBLX-5/11N2	≤7N	≥0.5N	≥2mm
YBLX-5/11G1	≤4N	≥0.5N	≥1mm
YBLX-5/11G2	≤3N	≥0.5N	≥0.5mm
YBLX-5/11Q/1	≤25N	≥5N	≥1mm

YBLX-5/11D

YBLX-5/11N

YBLX-5/11

YBLX-5/11N1

YBLX-5/11N2

YBLX-5/11Q1

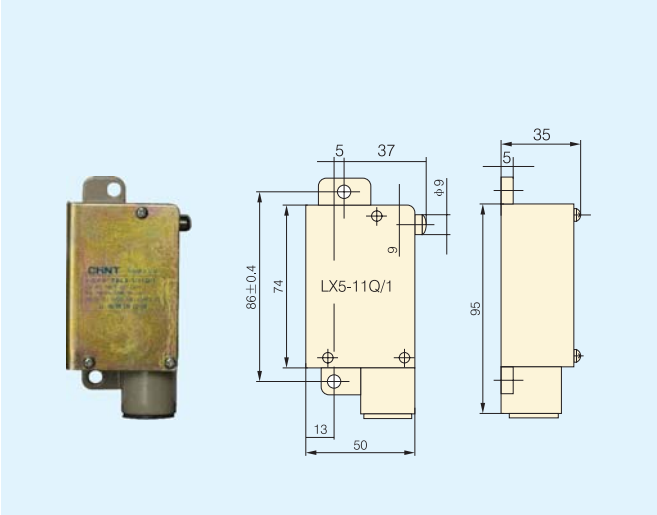

YBLX-5/11H

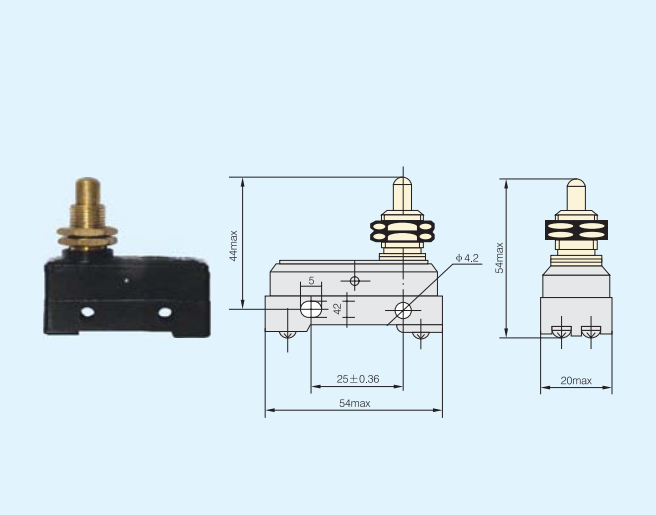

Ukrain	USA

YBLX-6 Travel Switch

Contacting types

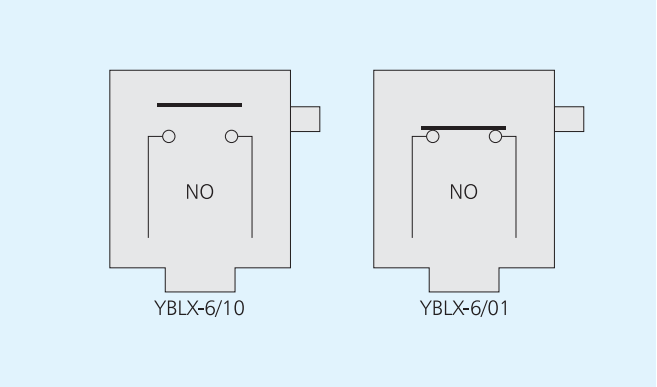

YB LX- 6/□ □ □ □

- Derivative code "CP" means long arm
- Derivative code "Q" means dust-proof
- Number of normal close contact
- Number of normal open contact
- Design sequence number
- Limit switch
- New product code

Protect degree	IP42
Conventional heating current	20A
Rated voltage	AC 380V DC 220V
Rated current	AC 2.63A DC 0.91A
Operating frequency	10 times/Minute
Environmental temperature	-25℃～+40℃
Relative humidity	≤90%
Altitude level	≤2000m
Application range	Control operating structure of machine tool and mechanism
Standards	IEC 60947-5-1

YBLX-6/10Q、YBLX-6/01Q

YBLX-6/10QCP、YBLX-6/01QCP

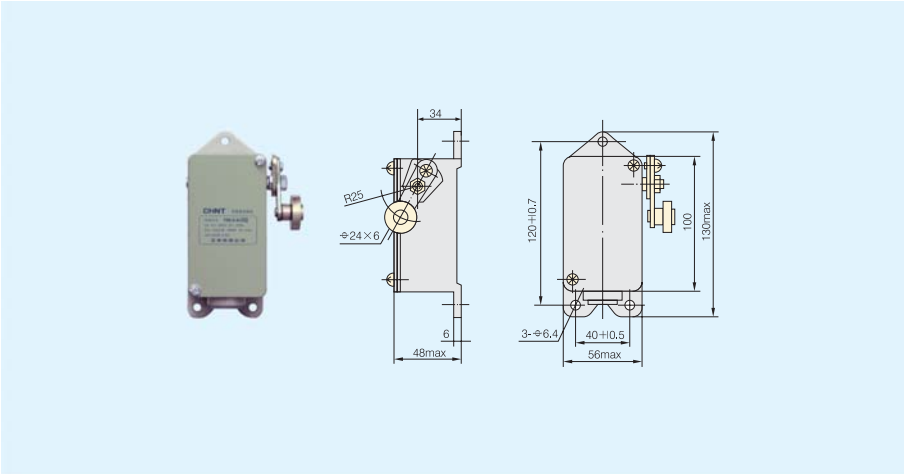

Ukrain	USA

YBLX-7 Travel Switch

Contacting types

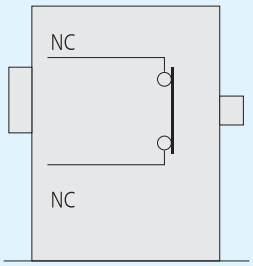

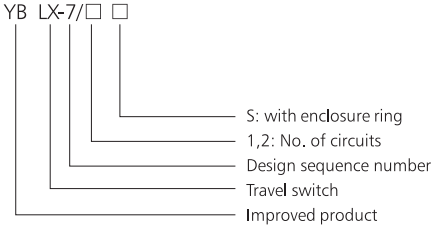

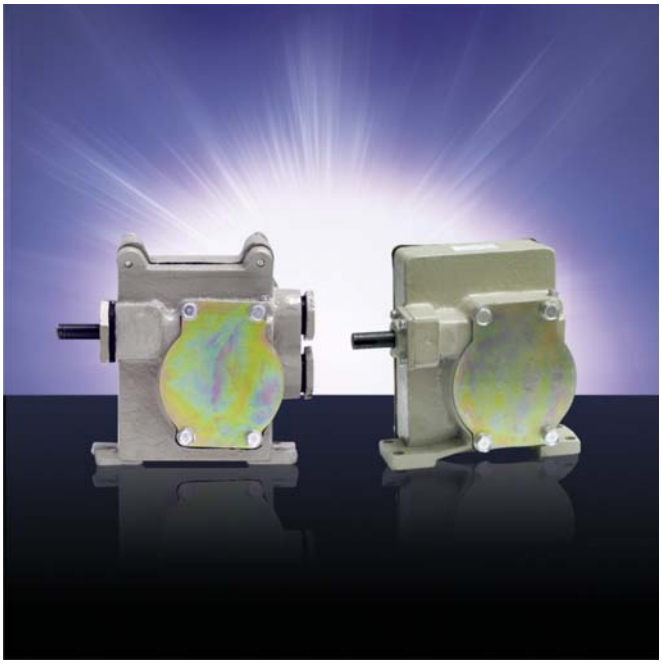

Conventional heating current	20A
Rated voltage	AC 380V DC220V
Rated current	AC 3.95A DC0.55A
Transmission ratio	1: 50
Number of circuits	LX7-1, LX7-1S 1 LX7-2, LX7-2S 2
Application range	Limitation on lifting mechanism travel of crane, terminal switch of automatic system or electric dragging device
Standards	IEC60947-5-1

YBLX-7/2、YBLX-7/2S

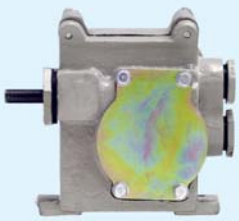

YBLX-7/1、YBLX-7/1S

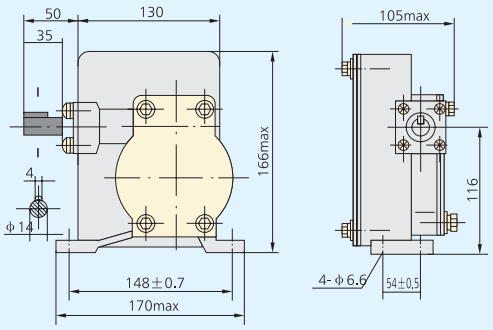

Ukrain	USA

YBLX-8 Travel Switch

Contacting types

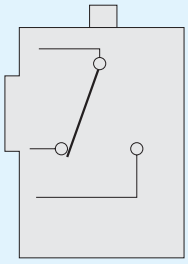

Protect degree	IP52
Rated breaking current	20A
Rated voltage	AC 380V DC220V
Rated current	AC 1000VA DC200W
Application range	Control electric circuits and security operation
Standard	GB14048.5-93

YBLX-8/5	Without coil device

YBLX-7/1、YBLX-7/1S

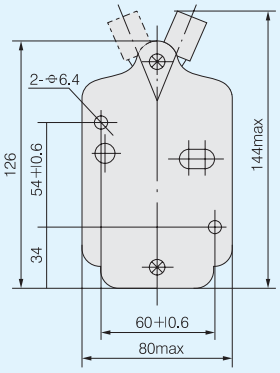

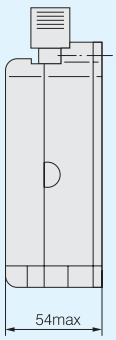

Ukrain	USA

YBLX-10 Travel Switch

Contacting types

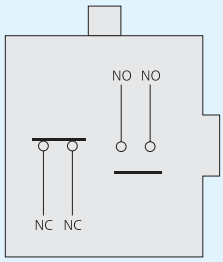

YB LX 10-□ □ □□

- S: with enclosure ring
- Number of NC contact
- Number of NO contact
- Operating mode (refer to table below)
- Design sequence number
- Travel switch
- Improved product

Number code	Operating mode
1	Operating arm with single roller
2	Fork type operating arm with double rollers
3	Operating arm through on-load hammer
4	Trinacriform operating arm
5	Rocker arm with roller through hammer
6	With 2 operating arms on both two sides of the case

Conventional heating current	10A
Rated voltage	AC 380V DC 220V
Rated current	AC 0.79A DC 0.091A
Operating frequency(operations/munite)	6
Environmental temperature	-25℃～+40℃
Relative humidity	≤85%
Altitude level	≤2000m
Application range	Terminal protection of mechanism travel in control circuits
Standards	IEC60947-5-1

Model	Purpose
YBLX-10/11、12、11S、12S	For transmission mechanism with large inertial travel distance
YBLX-10/21、22、21S、22S	For transmission mechanism with large inertial travel distance
YBLX-10/31、32、31S、32S	For limit the travel of lifting mechanism
YBLX-10/41、42、41S、42S	For transmission mechanism with 3 operating positions
YBLX-10/51、52、51S、52S	For transmission mechanism with normal speed
YBLX-10/61、62、61S、62S	For transmission mechanism with fast speed

YBLX-10/11、YBLX-10/12

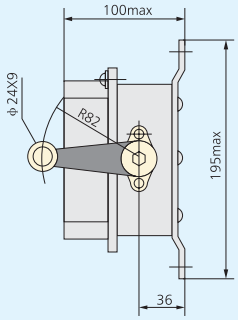

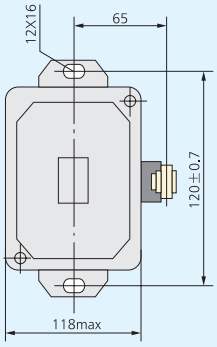

YBLX-10/11S、YBLX-10/12S

YBLX-10/21、YBLX-10/22

YBLX-10/31、YBLX-10/32

Ukrain	USA

YBLX-12 Travel Switch

Contacting types

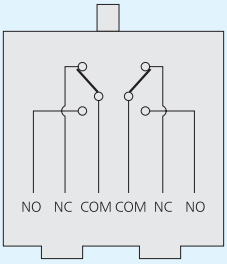

YB LX-12/2

- 2: Number. of circuit
- Design sequence number
- Travel switch
- Improved product

Rated voltage	380V
Conventional heating current	3A
PT	≤7mm
Rated current	AC 0.26A DC0.14A
OT	≥1mm
OF	≤16N
RF	≥2.45N
Standard	IEC60947-5-1

YBLX-12/2

YBLX-12/2(Long lever)

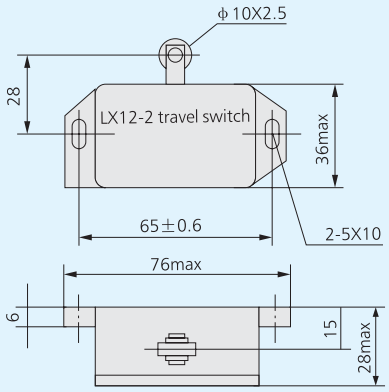

Ukrain	USA

YBLX-19 Travel Switch

Contacting types

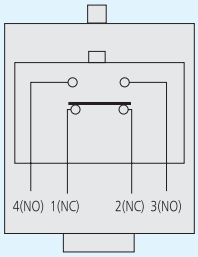

YB LX-19/□/□ □ □

- 1: automatic reset; 2: non-automatic reset
- 0: direct-driven type
- 1: roller mounted inside the transmission lever
- 2: roller mounted outside the transmission lever
- 3: two rollers, with one inside groove of transmission lever, the other outside the groove
- 0: without roller
- 1 with 1 roller
- 2: with 2 rollers
- K: un-locking type
- Design sequence number
- Travel switch
- Improved product

Protechion degree	Ip52
Conventional heating current	5A
Rated voltage	AC 380V DC220V
Rated current	AC 0.79A DC0.1A
Operating frequency(operations minute)	20
Lasting ratio of electrification	40%
Mechanical life (operations)	$60x10^4$
Electric life (operations)	$30x10^4$
Environmental temperature	-25℃～+40℃
Relative humidity	≤90%(20℃)
Altitude level	≤2000m
Voltage withstand	Between terminals of the same polarity (1140V)
	Between electrified components and earth (2500V)
	Between terminals and un-electrified metal components (2500V)
Application range	It is applied to control travel of operating mechanism, or to change its moving direction and speed
Standard	IEC60947-5-1

Operating performances \ Model	YBLX-19/K	YBLX-19/001	YBLX-19/111 YBLX-19/121 YBLX-19/131	YBLX-19/212 YBLX-19/222 YBLX-19/232
OF(max)	10N	16N	20N	25N
RF(min)	1N	1.5N	2.5N	
PT(max)	5mm	7mm	45°	80°
MD(max)	3mm	3.5mm	25°	
OT(min)	0.6mm	2mm	15°	-

YBLX-19/K

YBLX-19/001

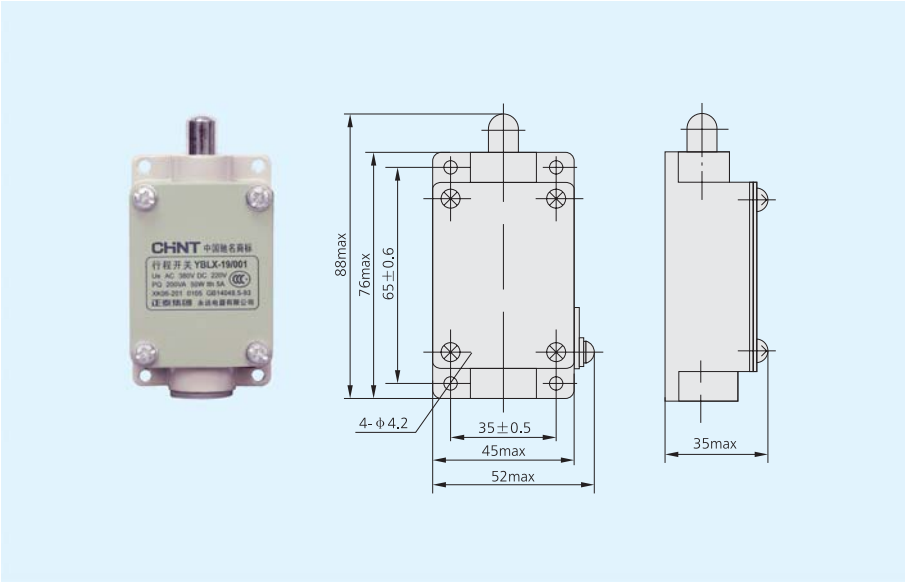

YBLX-19/111

YBLX-19/121

YBLX-19/131

YBLX-19/212、222、232

Ukrain	USA

YBLX-22A Travel Switch

Contacting types

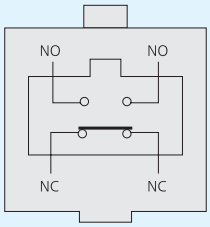

YB LX-22 A/□

- Operating mode, refer to aside code for definition
- Modified type
- Design sequence number
- Travel switch
- Improved product

Number code	Operating mode
1	Single arm with roller
2	"Fork" type arm with double rollers
4	Hammer type

Protection degree	IP42
Conventional heating current	20A
Rated voltage	AC 380V DC220V
Rated current	AC 20A DC0.2A
Altitude	≤2000m
Environmental temperature	-25℃～+40℃
Relative humidity	≤80%
Application range	Limit travel of lift and all kinds of machinery
Standard	IEC60947-5-1

Model	Purpose
YBLX-22/1	Single arm with roller, for transmission mechanism with normal inertial travel distance
YBLX-22/2	Fork type arm with double rollers, for transmission mechanism with large inertial travel distance
YBLX-22/3	Hammer type, for lifting mechanism

YBLX-22/2

YBLX-22/3

YBLX-22/1

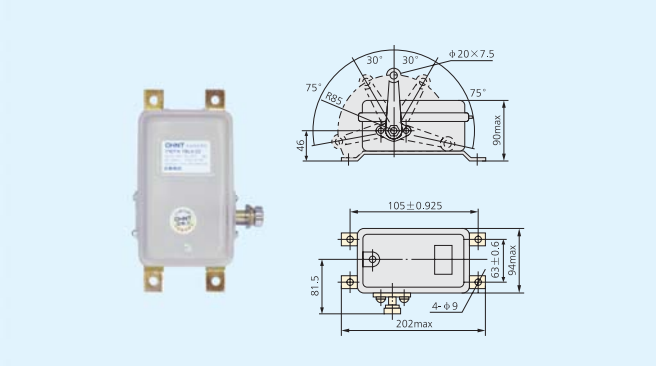

Ukrain	USA

YBLX-29 Travel Switch

Contacting types

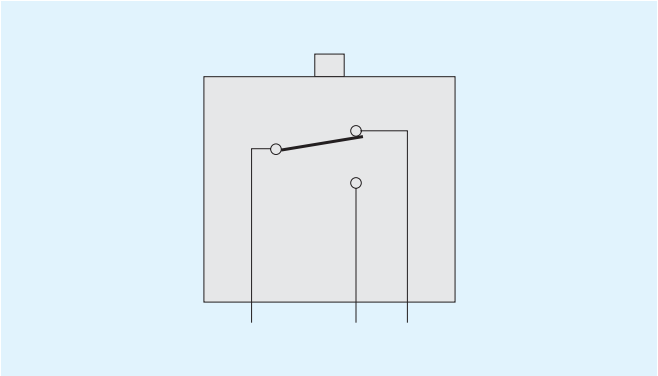

YB LX-29 /□ □/□

- Number code
- 1: down-lead of connection board, 2: short lever, 3: long lever, 4: front mounting, 5: mounting on board
- Auxsliary code: "Q" dust-proof, "H" buffer
- Number code
- Operating mode, refer to aside table for designations
- Design sequence number
- Travel switch
- Improved product

Number code	Operating mode
1	Plunger type
2	Single arm with roller
3	Two sections roller type
4	High plunger type
5	Roller plunger type
6	Lever type
7	Roller lever type

YBLX-29/2Q/4

YBLX-29/5Q

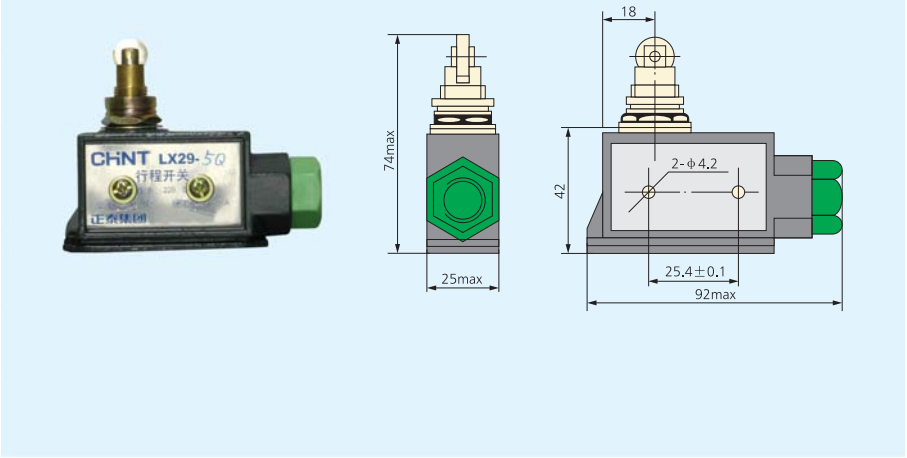

YBLX-29/1/1

YBLX-29/1H

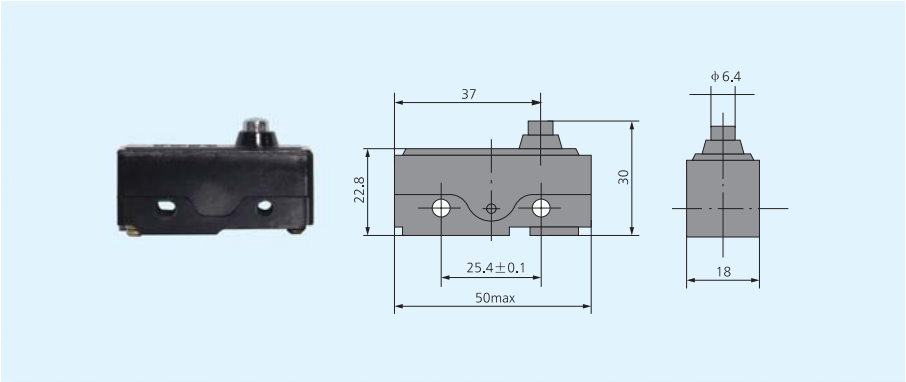

YBLX-29/5/5

YBLX-29/7/2

YBLX-29/7/3

YBLX-29/4S/4

YBLX-29/2S

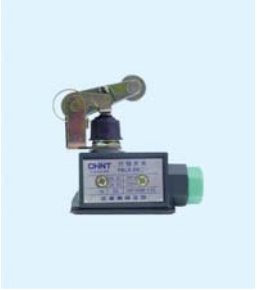

Model	Mode	OF	RF	PT	OT	MT
YBLX-29/1，YBLX-29/1/1	Plunger type	≤8	≥6N	≤2mm	≥0.1mm	≤1.5mm
YBLX-29/1H，YBLX-29/1H/1	Plunger type, buffering	≤8	≥6N	≤2mm	≥0.1mm	≤0.15mm
YBLX-29/2Q，YBLX-29/2Q/4	Single arm with roller, dustproof	≤16	≥5N	≤7mm	≥2mm	≤0.4mm
YBLX-29/2S，YBLX-29/2S/4	Single arm with roller, waterproof	≤16	≥5N	≤7mm	≥2mm	≤0.4mm
YBLX-29/3Q，YBLX-29/3Q/4	With two sections of roller, dustproof	≤16	≥5N	≤7mm	≥2mm	≤0.4mm
YBLX-29/3S，YBLX-29/3S/4	With two sections of roller, waterproof	≤16	≥5N	≤7mm	≥2mm	≤0.4mm
YBLX-29/4Q，YBLX-29/4Q/4	Projecting plunger type, dustproof	≤16	≥5N	≤7mm	≥2mm	≤0.15mm
YBLX-29/4S，YBLX-29/4S/4	Projecting plunger type, waterproof	≤16	≥5N	≤7mm	≥2mm	≤0.3mm
YBLX-29/4/5，YBLX-29/4/5	Projecting plunger type	≤8	≥6N	≤5mm	≥2mm	≤0.15mm
YBLX-29/5Q，YBLX-29/5Q/4	Plunger with roller, dustproof	≤16	≥5N	≤7mm	≥2mm	≤0.15mm
YBLX-29/5/5，YBLX-29/5/5	Plunger with roller	≤8	≥6N	≤5mm	≥2mm	≤0.15mm
YBLX-29/6/2，YBLX-29/6/2	Short lever type	≤8	≥6N	≤7mm	≥2mm	≤1.2mm
YBLX-29/6/3，YBLX-29/6/3	Long lever type	≤6	≥4N	≤10mm	≥2mm	≤2.4mm
YBLX-29/7/2，YBLX-29/7/2	Short lever with roller	≤8	≥6N	≤7mm	≥2mm	≤1.2mm
YBLX-29/7/3，YBLX-29/7/3	Long lever with roller	≤6	≥4N	≤10mm	≥2mm	≤2.4mm

Ukrain	USA

YBLX-33 Travel Switch

Contacting types

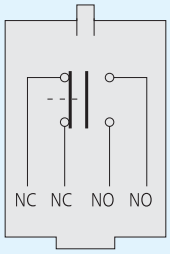

YB LX-33/□ □/□

- Derivative code
- Number. of controlled circuits
- Operating mode: 1:lever type, 2: fork type, 3: hammer type
- Design sequence number
- Travel switch
- Improved product

Protecion degree	IP42
Conventional heating current (A)	20A
Rated voltage (V)	AC 380V DC220V
Rated current	AC 9.5A DC0.55A
Mechanical life (operations)	60×10^4
Environmental temperature	-25℃～+40℃
Relative humidity	≤90%
Application range	Travel limitation and terminal protect of lift's horizontal moving mechanism and rising moving in control circuits
Standard	IEC60947-5-1

YBLX-33/11、YBLX-33/12

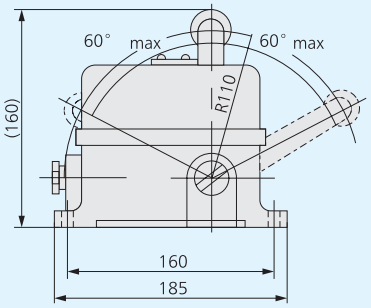

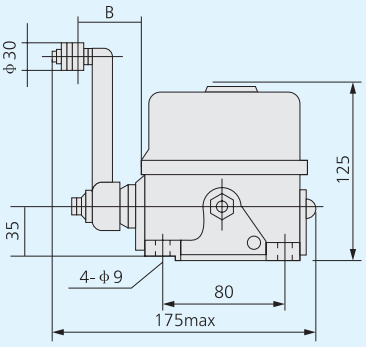

YBLX-33/21、YBLX-33/22

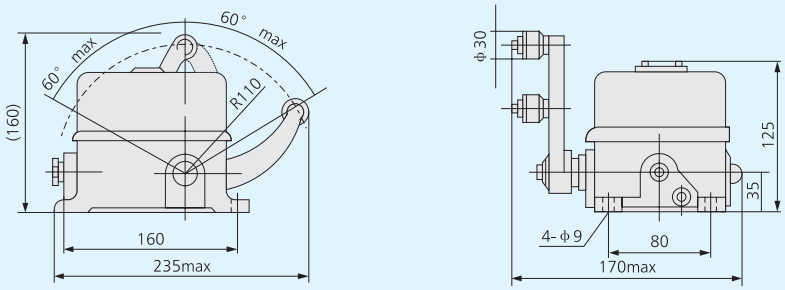

YBLX-33/31, 32

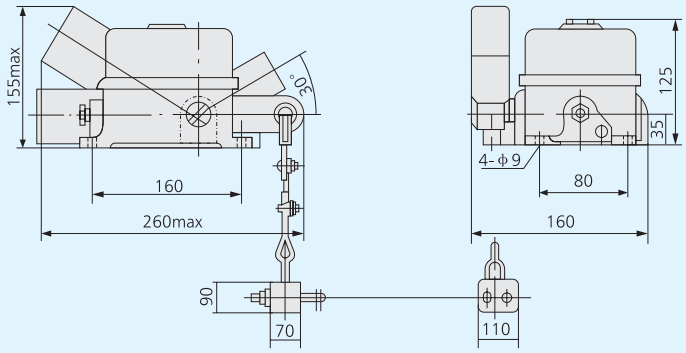

Ukrain	USA

YBLX-44 Breaking Limitator

Contacting types

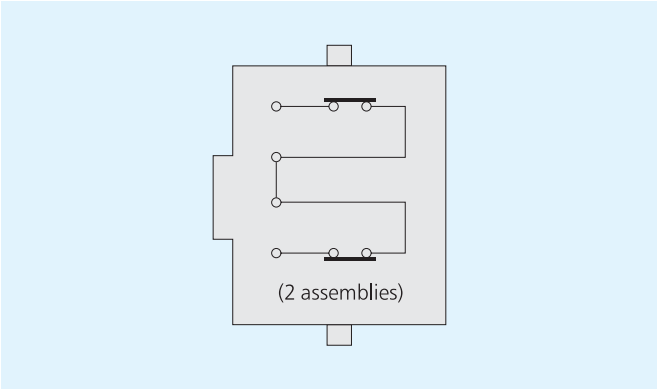

YB L X -44/□

- Rated operational current
- Design sequence number
- Limitation
- Master switch
- Improded product

Protecion degree	IP42
Rated operational voltage	AC 380V DC220V
Environmental temperature	-25℃～+40℃
Relative humidity	≤85%
Altitude	≤1500m
Application range	CD1, MD1 type of 0.5～10 ton normally apply on cable type electric block to realize limitation protection of lifting & falling movement, and can direct break the main circuit.

Model	Rated operational current	Max. Power of controllable motor	OT	Allowable OT	OP
YBLX-44/3	3A	1.5kW	≤8mm	≥1mm	≤15N
YBLX-44/10	10A	4.5kW	6～8mm	≤3mm	≤30N
YBLX-44/20	20A	7.5kW	8～10mm	≤3mm	≤50N
YBLX-44/40	40A	13kW	12～14mm	≤3mm	≤100N

YBLX-44/10A、YBLX-D/10A、YBLX-Z1/10A、YBLX-101/10A

YBLX-44/20A、YBLX-D/20A、YBLX-Z1/20A、YBLX-101/20A

YBLX-44/40A、YBLX-D/40A、YBLX-Z1/40A、YBLX-101/40A

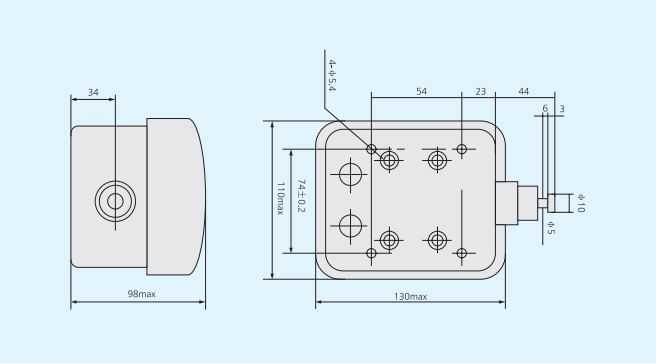

Ukrain	USA

YBLX-JW2、JBLW-JW2B Travel Switch

Contacting types

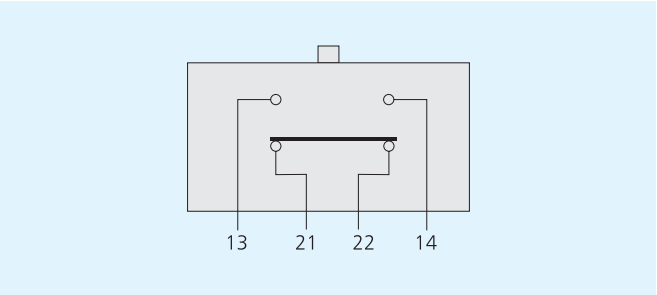

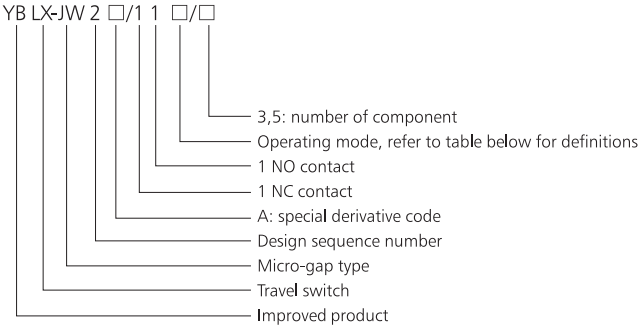

Letter code	Operating mode
W1	Drive of roller
W2	Horizontally-driven type
L	Roller direct driven type
G	Roller & lever transmission type
Z	Combination type
H	Protection type
B	Simple protection type

Protection degree	IP52
Rated voltage	AC 220V DC220V
Rated current	AC 3A DC0.42A
Mechanical life	$60X10^4$
(operations)	$30X10^4$
Electric life(operations)	$100X10^4$
Operating frequency	AC 40
(operations/minute)	DC 20
Altitude	≤2500m
Environmental temperature	-25℃～+40℃
Relative humidity	≤90%
Voltage withstand	Between electrified components and the earth (2500V)
Application range	Between electrified components of the same polarity (2500V)
	Between electrified components of the different polarity (1140V)
	Control travel of operating mechanism or change its direction & speed
Standard	IEC60947-5-1

Model / Operating performances	YBLX-JW2/11	YBLX-JW2/11Z/3	YBLX-JW2/11Z/5	YBLX-JW2/11B
OF(max)	3.5N	7N	7N	7N
RF(min)	⩾0.8N	⩾35N	⩾35N	⩾35N
PT(max)	2±1kg	3±1kg	3±1kg	3±1kg
MD(max)	⩽2mm	⩽3mm	⩽3mm	⩽3mm
OT min)	⩾0.5mm	⩾2mm	⩾2mm	⩾2mm
Open-distance of contact	⩾0.6mm	⩾0.6mm	⩾0.6mm	⩾0.6mm

Model / Operating performances	YBLX-JW2A/11	YBLX-JW2A/11H/W2	YBLX-JW2A/11H/W1	YBLX-JW2A/11H/G	YBLX-JW2A/11H/L
OF(max)	3.5N	10N	10N	8N	10N
RF(min)	⩾0.8N	⩾3N	⩾3N	⩾1N	⩾3N
PT(max)	2±1kg	⩽5kg	⩽5kg	⩽6kg	⩽5kg
MD(max)	⩽2mm	⩽4mm	⩽4mm	⩽5mm	⩽4mm
OT min)	⩾0.5mm	⩾1.2mm	⩾2mm	⩾2mm	⩾2mm
Open-distance of contact	⩾0.6mm	⩾0.6mm	⩾0.6mm	⩾0.6mm	⩾0.6mm

YBLX-JW2/11B

YBLX-JW2/11

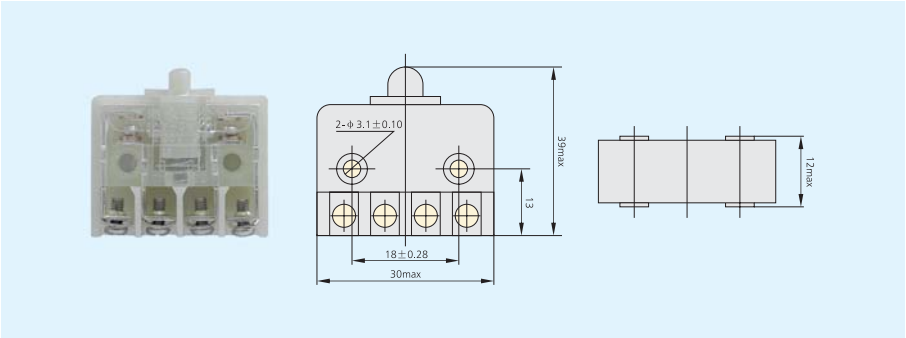

YBLX-JW2/11H/G

YBLX-JW2/11H/W1

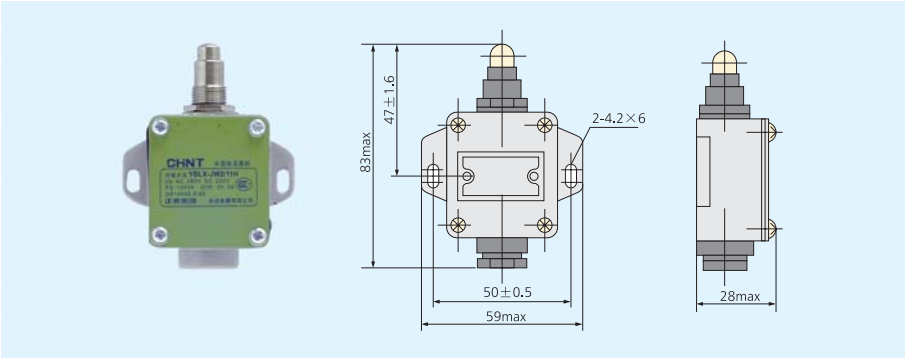

YBLX-JW2/11H/W2

YBLX-JW2/11Z/3

YBLX-JW2/11Z/5

YBLX-JW2/11H/LTH

Ukrain	USA

YBLX-X2 Travel Switch

Contacting types

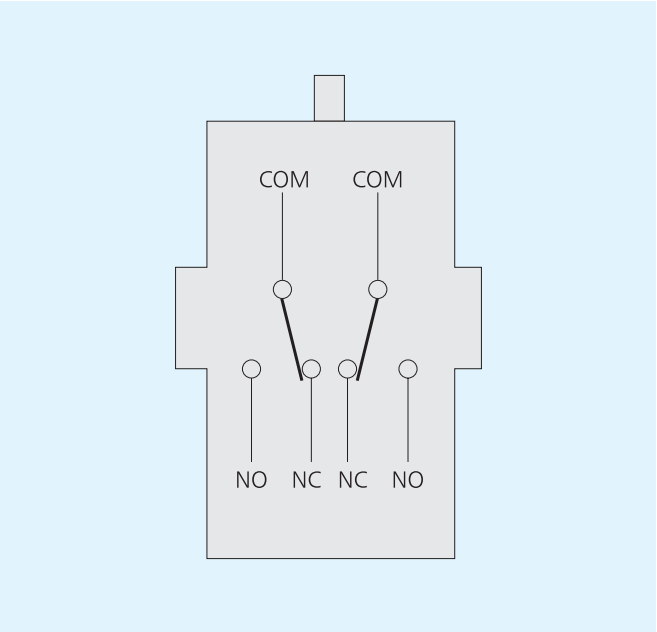

YB LX-X 2/□

- N: with rotating roller
- Blank: straight driven type
- Design sequence number
- Travel switch
- Improved product

Conventional heating current (A)	10A
Rated voltage (V)	AC 380V DC220V
Number of NO contact	2 pairs
Number of NC contact	2 pairs
Altitude	≤2000m
Environment temperature	-25℃～+40℃
Relative humidity	≤85%
Mechanical life (operations)	60×10^4
Electric life (operations)	30×10^4
Voltage withstands	Between terminals of the same polarity (1140V)
	Between electrified components and earth (2500V)
	Between terminals and un-electrified metal components (2500V)
Contacts exchange time	≤40ms
Application range	Travel control and limitation
Standard	IEC60947-5-1

Model / Operating performances	YBLX-X2	YBLX-X2-N
OF(max)	≤16N	≤16N
PT(max)	≤10mm	≤10mm
OT (mm)	≥1mm	≥1mm

YBLX-X2/N

YBLX-X2

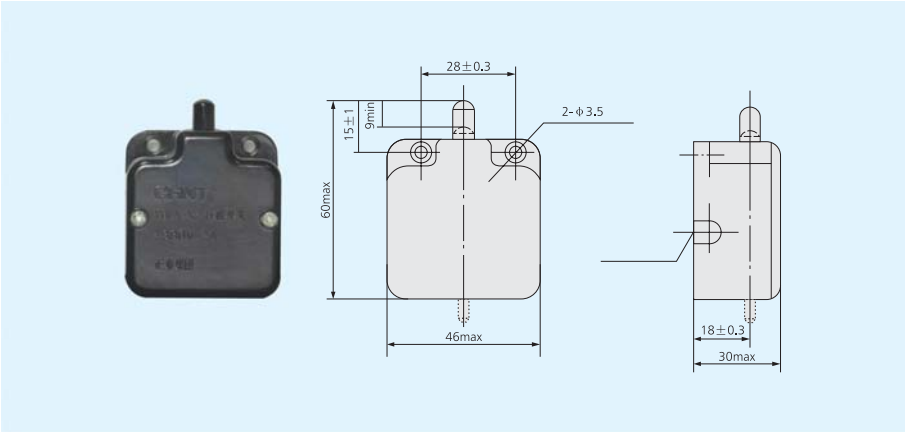

YBLXW-2 Micro-gap Switch

Contacting types

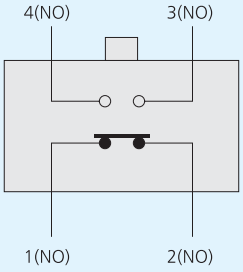

YB LX W-2/ 1 1

- No. of NC contact
- No. of NO contact
- Design sequence number
- Micro-gap
- Travel switch
- Improved product

Conventional heating current	3A
Rated voltage	AC 380V DC 220V
Rated current	AC 0.79A
	DC 0.14A
Rated control capacity	AC 300VA DC 30W
Mechanical life(operations)	60×10^4
Electric life(operations)	30×10^4
Operating frequency(operations minute)	40
Environmental temperature	-5℃～+40℃
Relative humidity	≤90% (20℃)
Altitude	≤2000m
Electric clearance	≥2.5mm
Creepage distance	≥3mm
Voltage withstands	Between electrified components and the earth (2500V)
	Between electrified components of different polarity (1140V)
Operating travel	2.5mm
OT	≥0.2mm
MD	≥1.6mm
OF	≤5N
RF	≤0.7N
Application range	Travel control, limitation protection, etc
Standard	IEC 60947-5-1
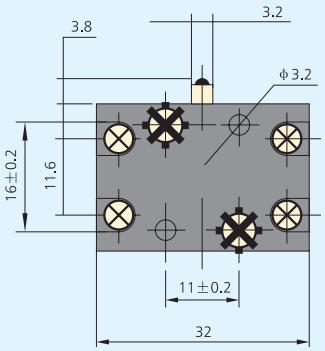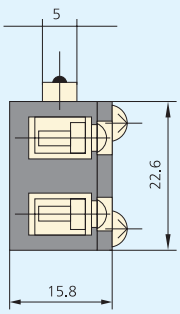
YBLXW-2/11