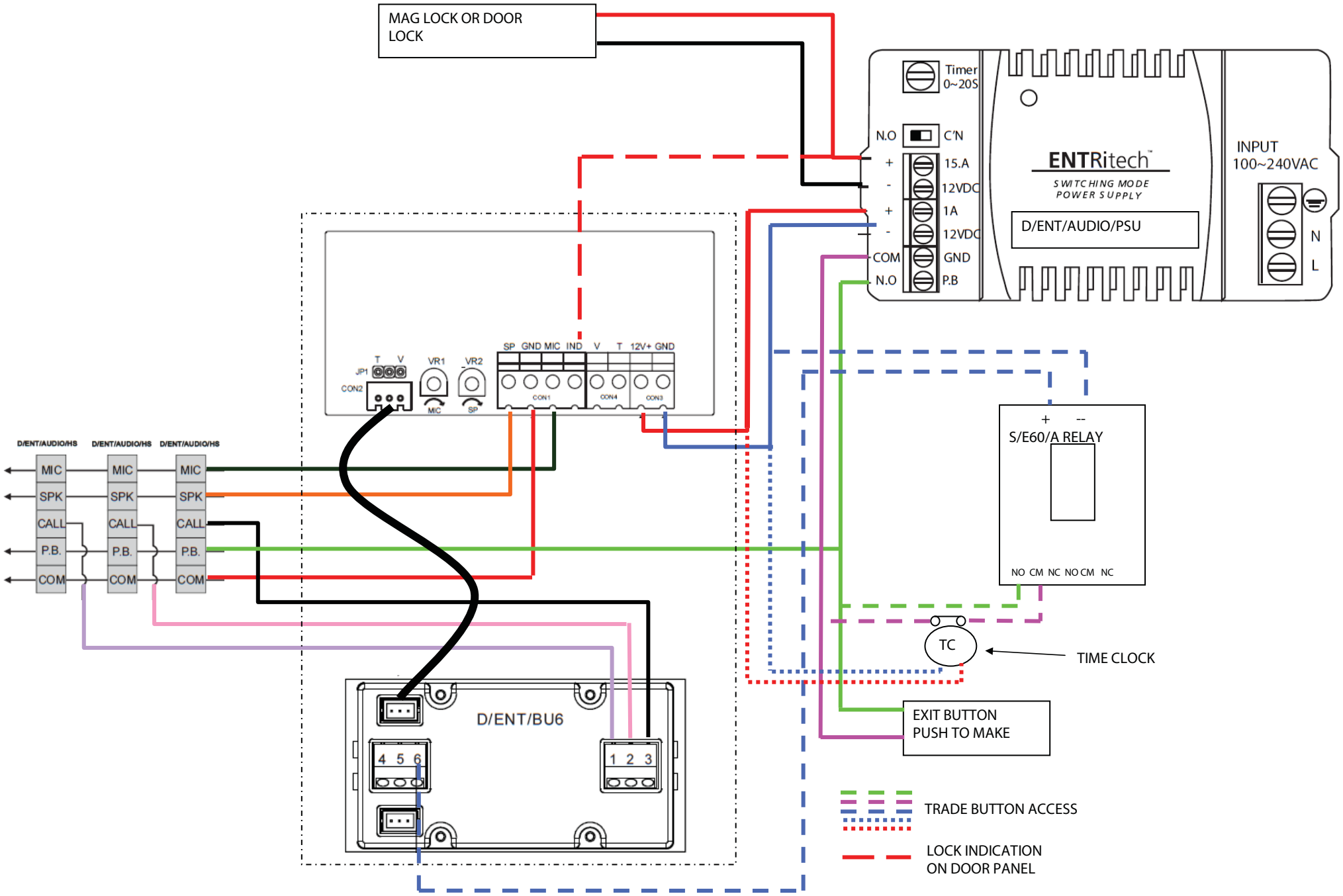AUDIO DOOR ENTRY WITH TRADE BUTTON AND LOCK INDICATION