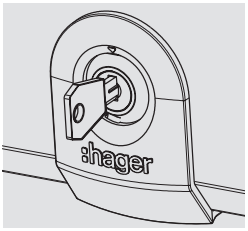

ZD0823

GB

VMLOCK
Keylock for use with Design 30 Consumer Units
Instructions/Data Sheet

This device allows the board to be locked to prevent unauthorised access.

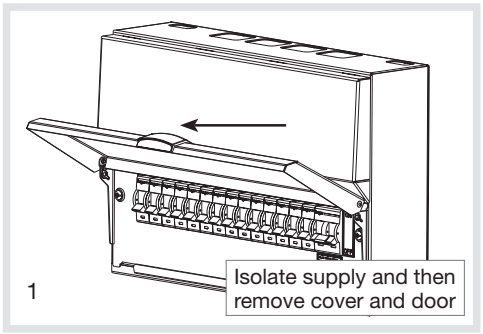

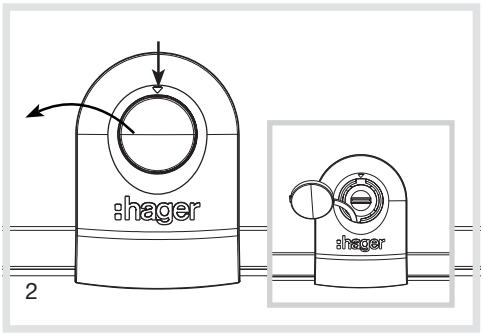

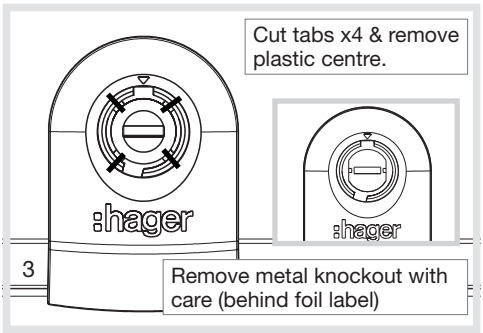

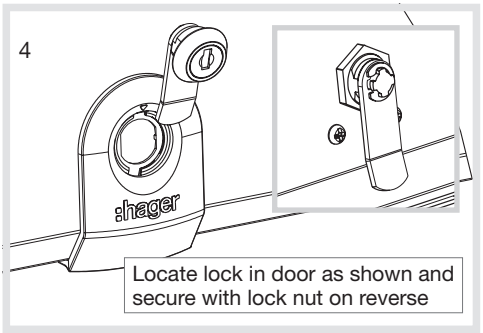

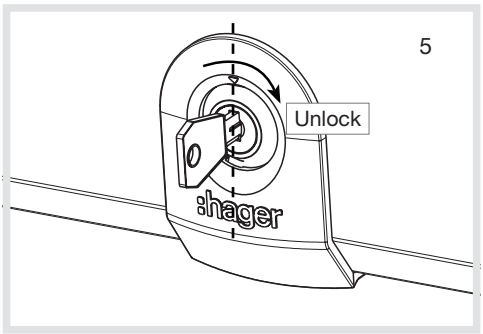

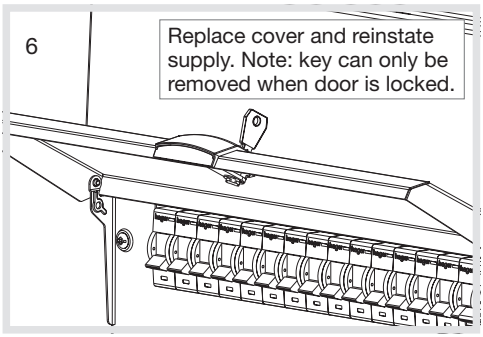

ZD0823