Steel wall-mounting enclosures
Additional information

PB500368-54

Acceptable loads on the mounting plates, bases and doors

Spacial 3D wall-mounting enclosures					
Acceptable loads (kg)					References
On plain mounting plates	On base	On door (1)	On vertical lug	On horizontal lug	
60	135	50	350	190	**NSYS3D3215** to **NSYS3D5320**
90	135	50	350	190	**NSYS3D5420** to **NSYS3D6425**
135	135	50	350	190	**NSYS3D6620** to **NSYS3D8630**
150	135	50	350	190	**NSYS3D10625** to **NSYS3D10830**
180	135	50	350	190	**NSYS3D101030D** to **NSYS3D141030D**

(1) On a sheet door with a thickness of 20/10e mm: 60 kg of maximum acceptable load (please consult us).

Areas without cut-outs

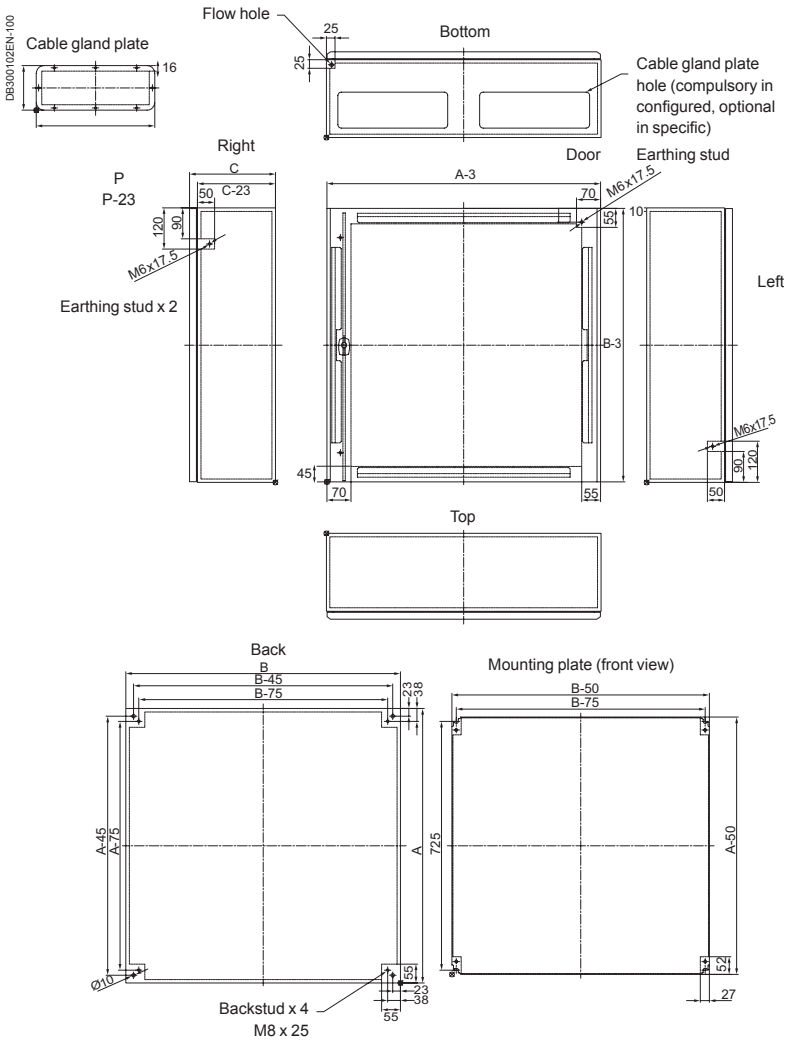

For 800, 1000 and 1200-mm widths, 2 cable-gland plates: see previous page.

Vertical cable guides from 400-mm height.
Horizontal cable guides from 800-mm width.

Download our DXF diagrams from our websites.