novah
Specialists in LED Lighting

PRODUCT DATA SHEET

Atlas Low/High Bay 150W 22500 lumens

EL150ALB

atlas LED LOW/HIGH BAY

KEY FEATURES

Robust technology and incredible efficiency combine together in the Atlas Low/High Bay. Easy to install with a lightweight, low-profile, anti-glare design, the Atlas Low/High Bay is ideal for a wide range of industrial applications.

COMMERCIAL APPLICATIONS

Warehouses, factories, sports arenas, sports halls, retail outlets.

PRODUCT DATA

LUMENS (lm)	22500lm
WATTAGE (W)	150W
COLOUR TEMPERATURE (K)	5000K
WEIGHT (kg)	2.83kg
BEAM ANGLE	110°x120°
CRI	>80
REPLACEMENT FOR	>400W MH/SON
DIMENSIONS (mm)	309 x 453 x 67mm
PRODUCT TYPE	Low bays
EFFICIENCY (lm/w)	150lm/W
RATED LIFETIME (hrs)	35,000hrs
IP	54
IK	10
WORKING ENVIRONMENT	-20°C - 40°C
WARRANTY	3
L70 RATING (hrs)	>80000

POLAR CURVE DIAGRAM

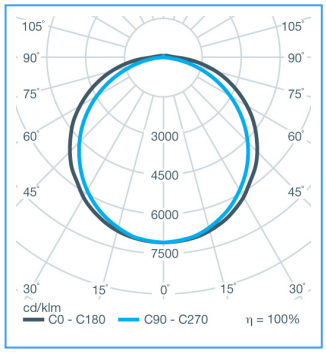

CONE DIAGRAM

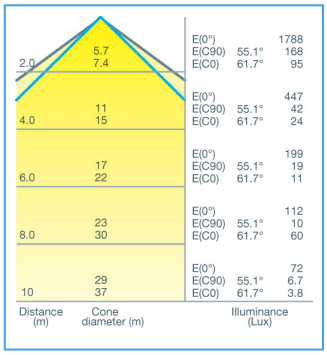

DIMENSIONS

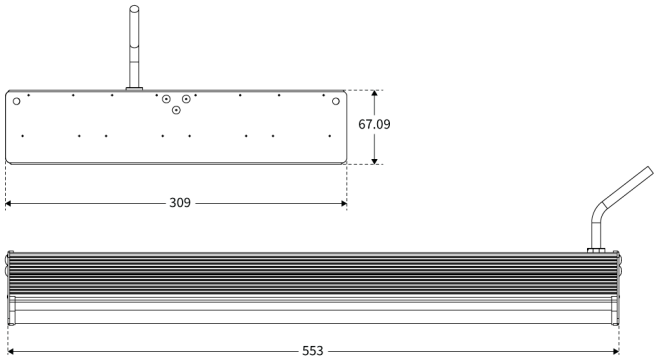

Generated at 08:34 on 23/04/2021. © 2021 Novah Ltd. All rights reserved. Page 1 of 1